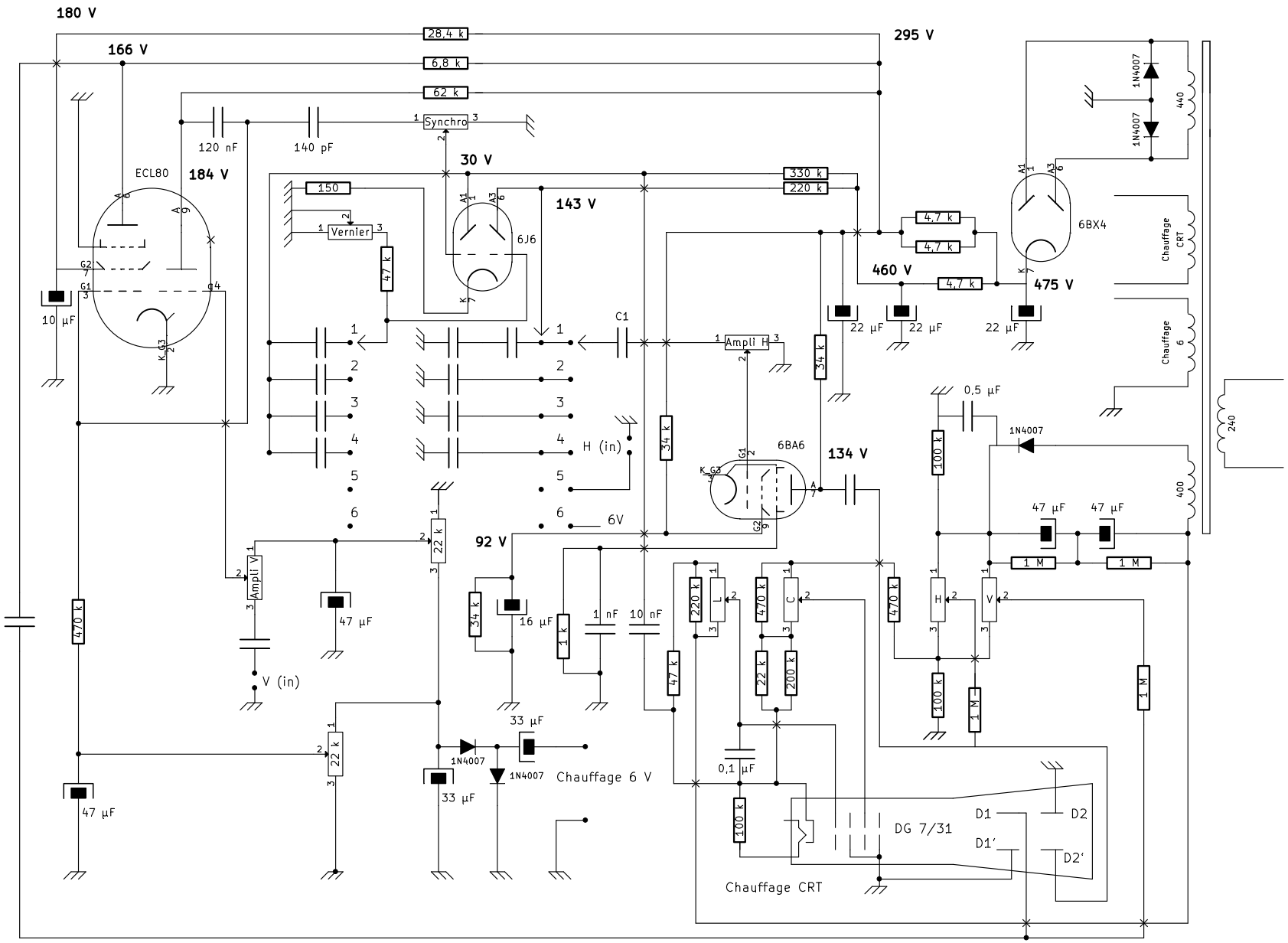

File: schéma5.sch		
Sheet: /		
Title: Oscillographe Modèle 732		
Size: A4	Date: 20 may 2011	**Rev:**
KiCad E.D.A. eeschema (2010-05-05 BZR 2356)-stable		Id: 1/1