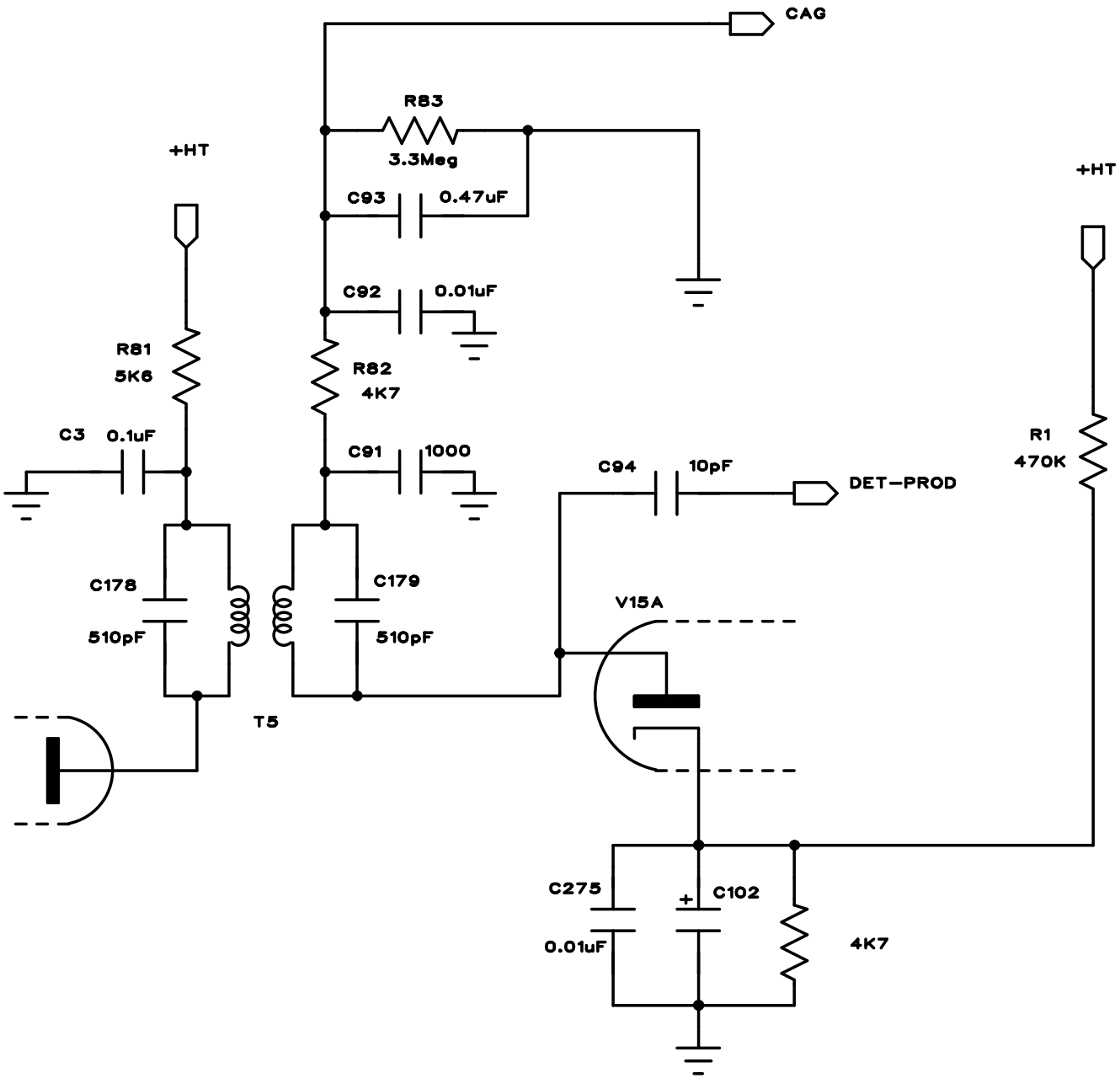
CAG
R83
3.3Meg
+HT
C93
0.47uF
C92
0.01uF
R81
5K6
R82
4K7
C3
0.1uF
C91
1000
C94
10pF
DET-PROD
+HT
R1
470K
C178
510pF
C179
510pF
V15A
T5
C275
0.01uF
C102
4K7