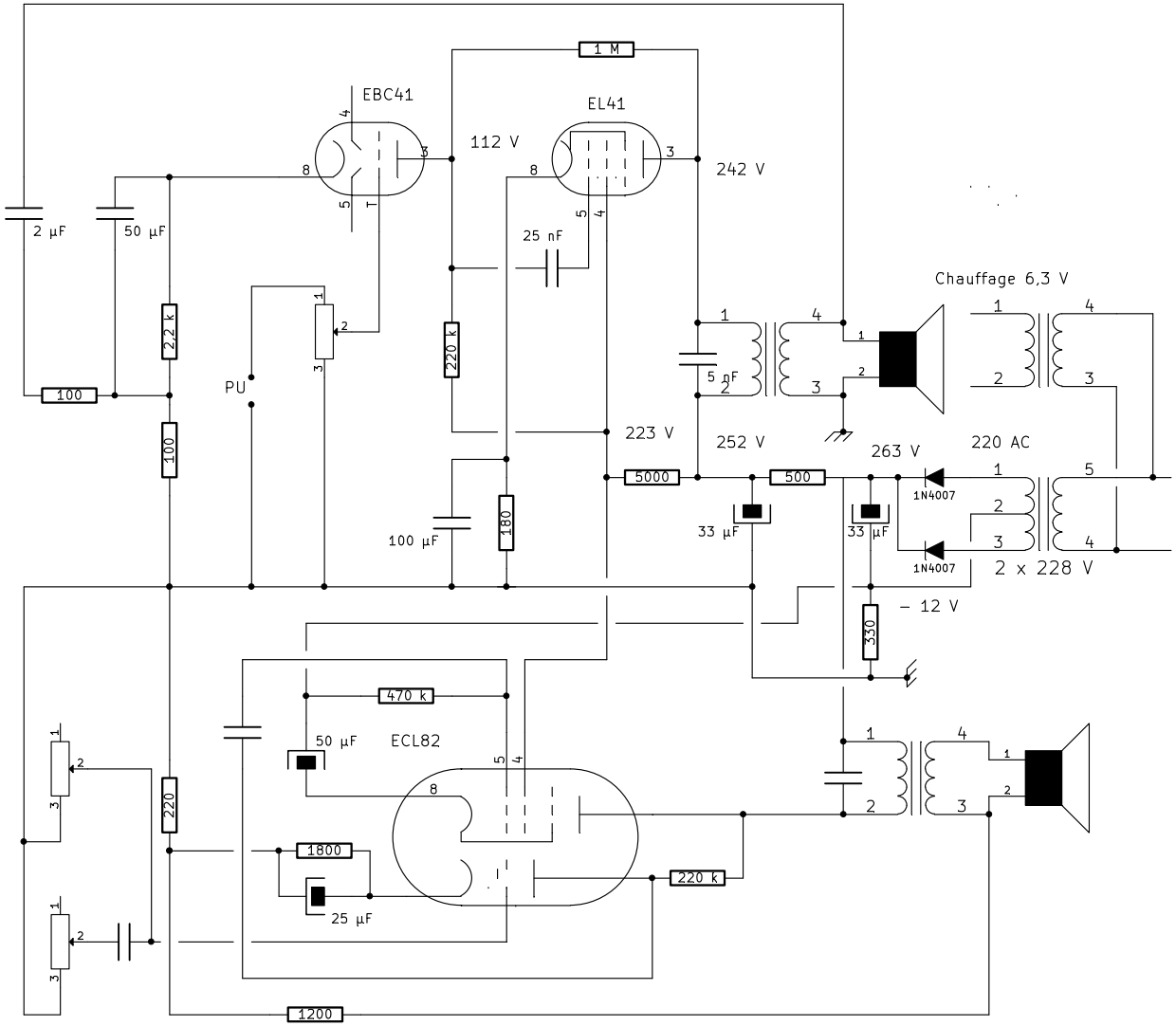

File: ampli.sch		
Sheet: /		
Title:		
Size: A4	Date: 27 sep 2013	**Rev:**
KiCad E.D.A. eeschema (2010-05-05 BZR 2356)-stable		Id: 1/1