REALISTIC®

Service Manual

20-113

PRO-2021
PROGRAMMABLE SCANNER
AM/FM MONITOR RECEIVER

Catalog Number: 20-113

CUSTOM MANUFACTURED FOR RADIO SHACK, A DIVISION OF TANDY CORPORATION

CONTENTS

	Page
SPECIFICATIONS	3
BLOCK DIAGRAM	4
PRINCIPLES OF OPERATION	5
GENERAL OPERATION OUTLINE	7
ALIGNMENT	8
RECEPTION CHECK	14
MEMORY CHECK	15
TROUBLESHOOTING	16
P.C. BOARD (TOP AND BOTTOM VIEWS)	18
WIRING DIAGRAM	20
ELECTRICAL PARTS LIST	21
DISASSEMBLY/EXPLODED VIEW	32
MECHANICAL PARTS LIST	33
SEMICONDUCTOR LEAD IDENTIFICATION AND IC CIRCUIT DIAGRAM	34
MICROPROCESSOR (IC) PORT FORMAT	42
APPENDIX	43
SCHEMATIC DIAGRAM	44

PRODUCT SAFETY NOTICE

Many electrical and mechanical parts in this chassis have special characteristics. These characteristics often pass unnoticed and the protection afforded by them cannot necessarily be obtained by using replacement components rated for higher voltage, wattage, etc. Replacement parts that have these special safety characteristics are identified in this manual and its supplements; electrical components having such features are identified by a ⚠ in the schematic diagram and the parts list.
Before replacing any of these components, read the parts list in this manual carefully. The use of substitute replacement parts that do not have the same safety characteristics as specified in the parts list may create shock, fire or other hazards.

SPECIFICATIONS

Description	Nominal spec.	Limit spec.
Frequency Coverage		
VHF LOW (or MID*)		30 ~ 54 MHz 5 kHz steps
		*or 68 ~ 88 MHz 5 kHz steps
AIRCRAFT		108 ~ 136 MHz 25 kHz steps
VHF HIGH		138 ~ 174 MHz 5 kHz steps
UHF		380 ~ 512 MHz 12.5 kHz steps
Sensitivity (20 dB S/N)		
FM: 3 kHz DEV. at 1 kHz		
AM: 60% MOD. at 1 kHz		
VHF LOW (or MID*) FM	0.5 μV	2 μV
AIRCRAFT AM	2.0 μV	5 μV
VHF HIGH FM	1.0 μV	3 μV
UHF FM	1.0 μV	4 μV
Selectivity –6 dB	±9 kHz	±12 kHz
–50 dB	±15 kHz	±18 kHz
Spurious Rejection		
at 40 MHz (or 78 MHz*)	50 dB	40 dB
at 120 MHz	50 dB	40 dB
at 154 MHz	50 dB	40 dB
at 450 MHz		Not specified
(except primary image)		
IF Rejection 10.7 MHz	60 dB	40 dB
at 154 MHz		
Modulation Acceptance (EIA RS-204-A)	±8 kHz	±5 kHz
Signal to Noise Ratio		
VHF LOW (or MID*)	45 dB	30 dB
AIRCRAFT	35 dB	25 dB
VHF HIGH	45 dB	30 dB
UHF	35 dB	25 dB
Residual Noise (Vol. Min.)	3 mV	5 mV
Scanning Rate Fast	8 channels/sec.	6 ~ 10 channels/sec.
Slow	4 channels/sec.	3 ~ 5 channels/sec.
Search Rate Fast	8 steps/sec.	6 ~ 10 steps/sec.
Slow	4 steps/sec.	3 ~ 5 steps/sec.
Priority Sampling	2 sec.	1 ~ 3 steps.
Scan Delay Time	2 sec.	1 ~ 3 sec.
Audio Output Power (T.H.D. 10 %)	1.5 W	1.0 W

Channels of Operation	Any 200 channels in any band combination
Channel, Frequency and Mode Display	Liquid crystal display
Receiving System	Direct Key entry Digital Frequency Controlled Synthesizer, Superheterodyne 1st IF: 10.7 MHz 2nd IF: 455 kHz
Power Source	AC 120V, 60 Hz, 15W max. DC 13.8V, 8W
Tape Out	Z=10 kohm, 500 mV nominal, 300 mV limit
Speaker	Built-in 3" (77mm) 8 ohm Dynamic Speaker
Accessory	Telescopic antenna Approx. 24-13/16" (63cm) Car mounting bracket with screws and DC cable
Dimensions	Approx. 3-1/8" x 10-2/8" x 8" (80 x 260 x 200 mm) HWD
Weight	4.4 lbs (2.0 kg)

NOTE: *Nominal specs represent the design specs; all units should be able to approximate these – some will exceed and some may drop slightly below these specs. Limit specs represent the absolute worst condition that still might be considered acceptable; in no case should a unit perform to less than within any limit spec.*

** VHF MID range (68 ~ 88 MHz) is for European and Australian Models only.*

BLOCK DIAGRAM

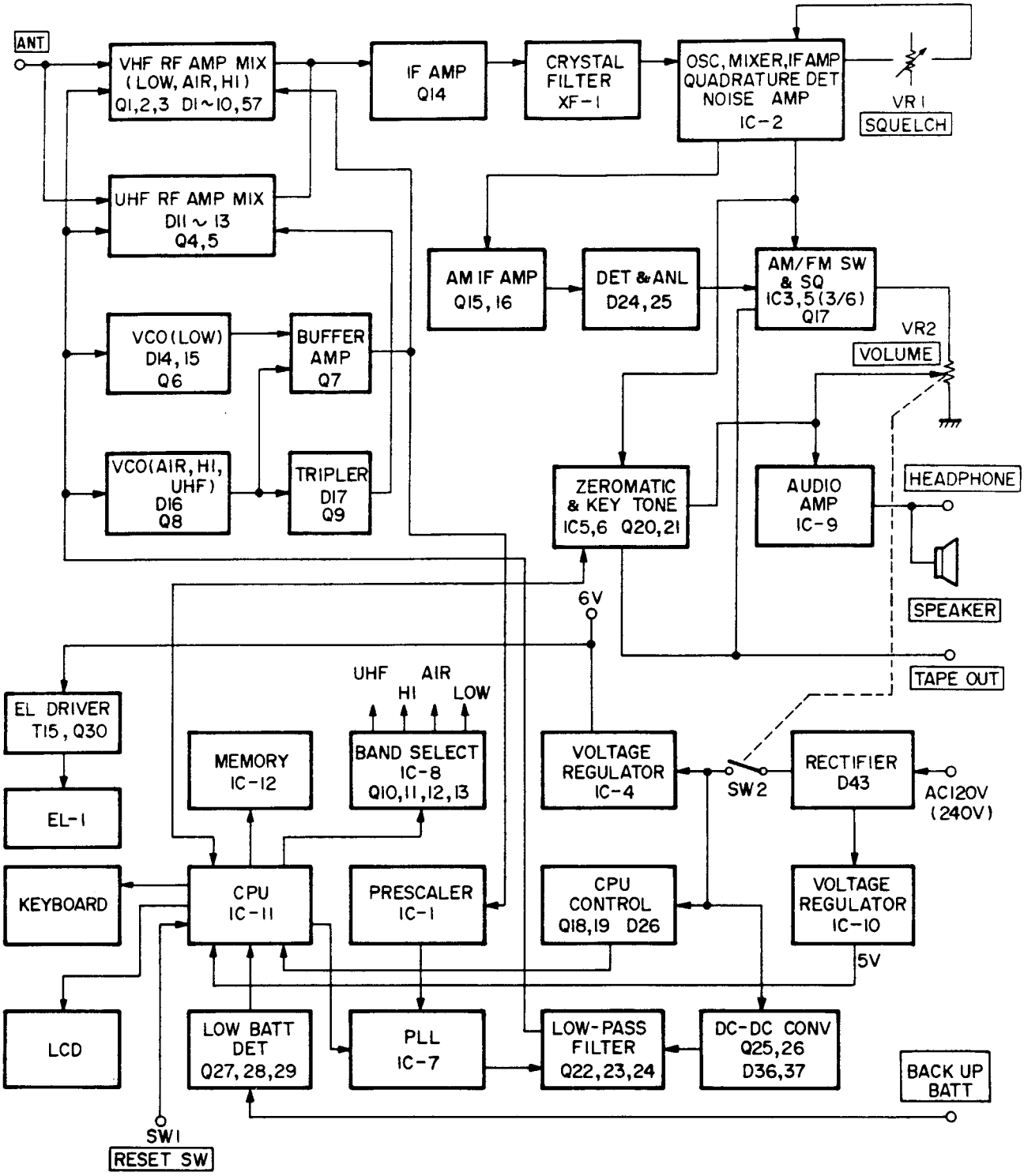

PRINCIPLES OF OPERATION

The PRO-2021 is a PLL (Phase Locked Loop) Synthesized VHF/UHF AM/FM Receiver, controlled by a CPU (Central Processing Unit) via the keyboard.

The VHF Low Band (30 ~ 54 MHz) or Mid Band (68 ~ 88 MHz) and High Band (138 ~ 174 MHz) are received in 5 kHz increments. Aircraft Band (108 ~ 136 MHz) is set up for 25 kHz increments, and the UHF Band (380 ~ 512 MHz) for 12.5 kHz increments.

Receiving frequency range, frequency determination, scanning speed, delay time, etc., are all functions controlled by the CPU. The CPU is able to do only the assigned functions, and no modification of the CPU is feasible.

The following paragraphs explain the operation of the circuit in terms of the functional blocks:

A varactor (variable capacitance diode) tuning ("Automatic Tuning System") is employed on all Bands.

Field-effect transistors (FET) are used in the RF/MIX circuits of Low (Mid), High and Aircraft Bands, to achieve optimum mix-modulation and mutual-modulation characteristics.
Q14 amplifies the 10.7 MHz IF.
A 10.7 MHz monolithic Crystal Filter is incorporated for better selectivity.

IC-2 contains the Local Oscillator, Mixer, IF Amplifier, Quadrature FM Detector, Noise Amplifier and DC amplifier. A Crystal Oscillator produces 10.245 MHz, which mixed with 10.7 MHz, resulting in 455 kHz IF. A 455 kHz Ceramic filter is provided to increase selectivity. The 455 kHz IF is amplified in the IF Amp stage, and a Quadrature FM Detector detects it to an audio signal. A portion of the 455 kHz Ceramic Filter output is picked up, amplified and detected by the AM IF Amp, which consists of Q15 and Q16 and is then applied to the next stage via the ANL circuit.

Detected output of AM and FM is applied to IC-9. IC-9 amplifies audio signals and feeds them to the speaker.

The zeromatic circuit consists of IC-5 and IC-6 and Q20, 21 and functions in the search mode.

IC-11 is the CPU. The CPU does data processing, calculation, etc. Any unstable supply voltage (V_{DD}) to the CPU can produce CPU malfunctions, such as wrong data processing, wrong data transfer, etc. To overcome this C149 and R146 "initialize" the CPU. Initialization is done when RESET switch is pushed. Figure A shows initializing waveform.

The CPU contains two clocks. One produces the waveform shown in Fig. B at Pins 49 and 50, which is used for program functioning. The other waveform, which appears at Pins 3 and 4, is derived from X-3 (32.768 kHz) which is used to determine Delay time, LCD display, etc. (Shown in Fig. C).

IC7 is the PLL frequency synthesizer. The VCO output is 1/64 or 1/65 divided by Pre-scaler IC1. The output of Pin 15 and 16 of IC7 is applied to the VCO control via the Low Pass Filter (Q22, 23, 24).

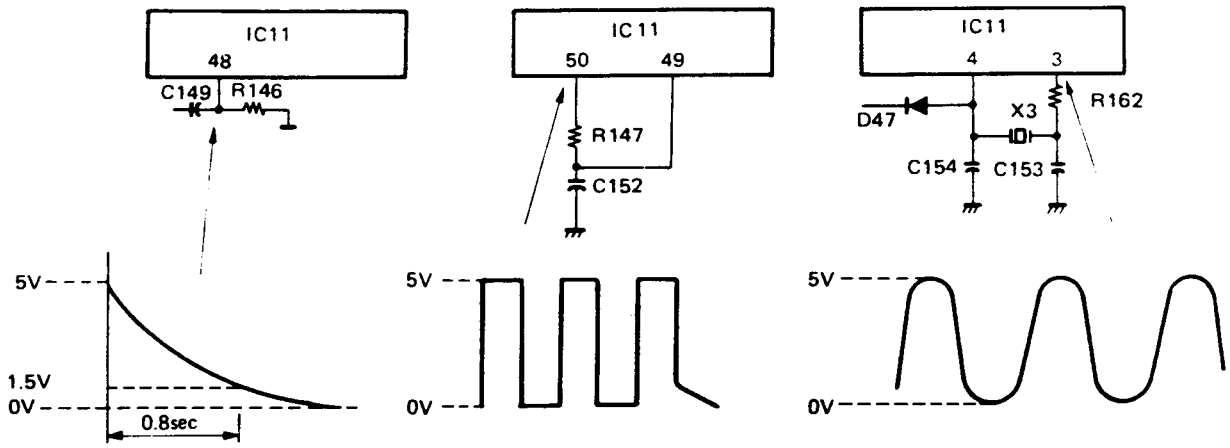

Figure A **Figure B** **Figure C**

GENERAL OPERATION OUTLINE

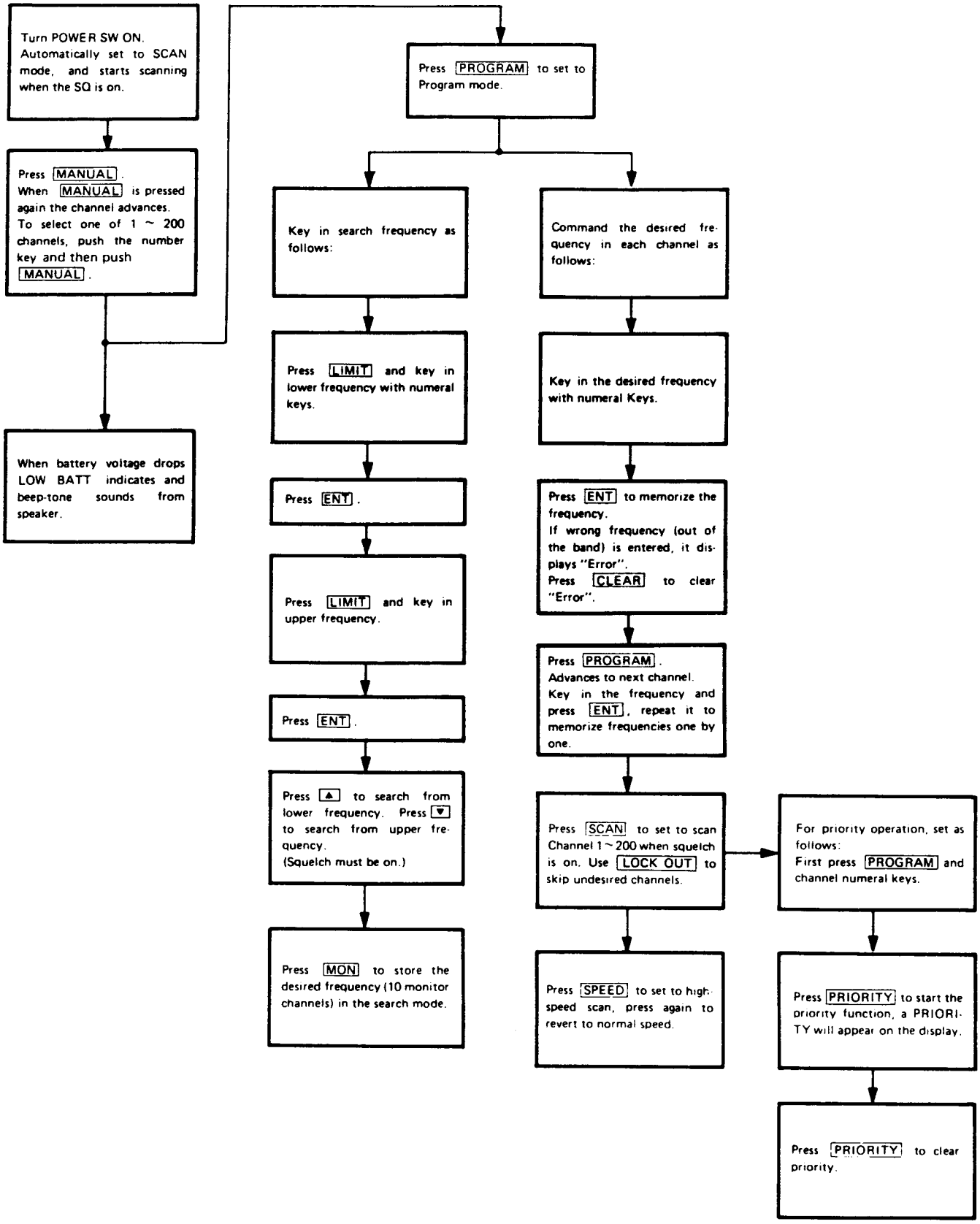

ALIGNMENT

ALIGNMENT AND TEST POINTS

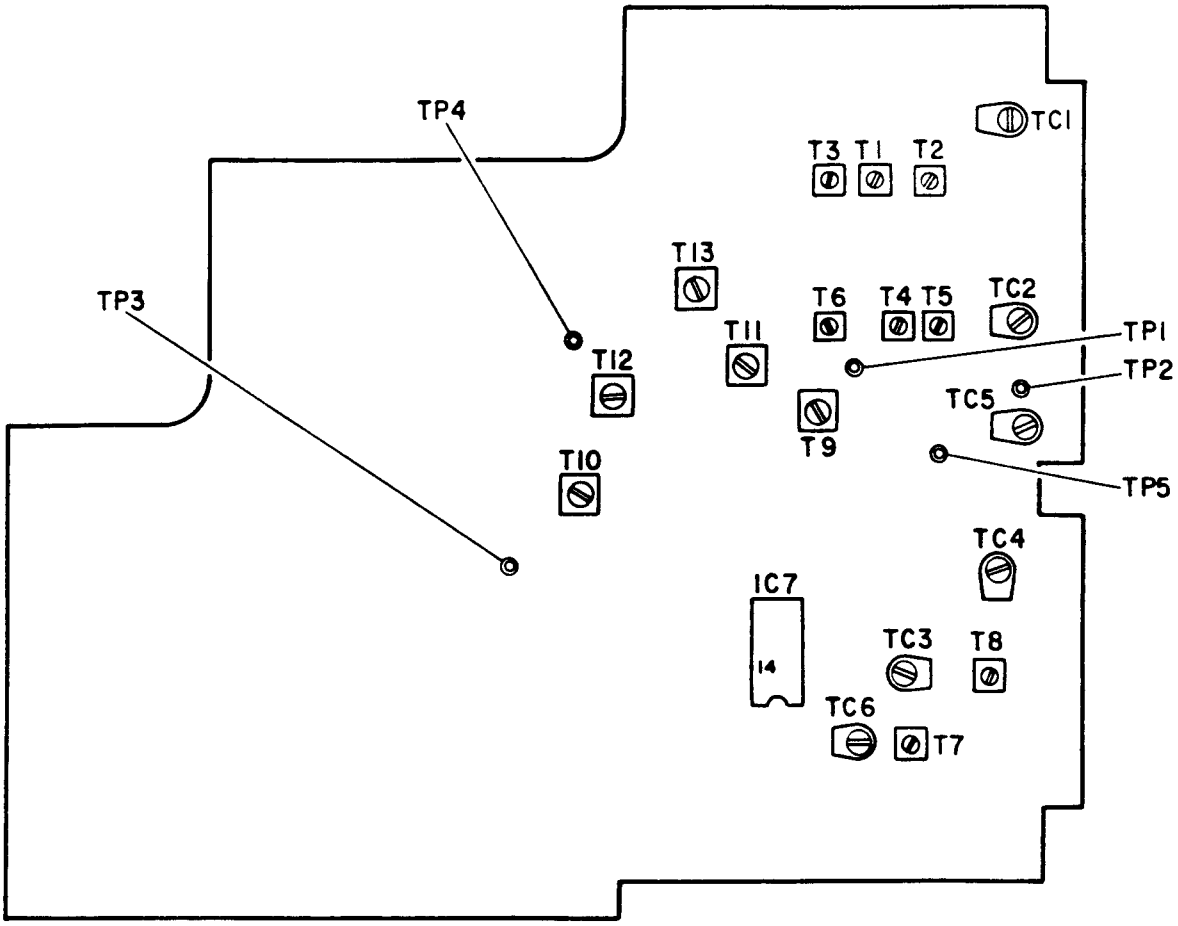

ALIGNMENT PREPARATION

Test equipment required

1. Oscilloscope (0 ~ 500 kHz, 0 ~ 50 MHz)
2. AC SSVM
3. DC SSVM
4. Frequency Counter (200 MHz)
5. 8-ohm dummy load
6. Slow Sweep Generator with variable marker (10.7 MHz)
7. VHF Sweep Generator with variable marker (30 ~ 54 MHz, 108 ~ 174 MHz)
8. UHF Sweep Generator with variable marker (380 ~ 512 MHz)
9. FM Signal Generator (30 ~ 54 MHz, 108 ~ 174 MHz, 380 ~ 512 MHz)
10. AM Signal Generator (108 ~ 136 MHz)

NOTE 1: *Use non-metallic tuning tools.*
The test equipment and Receiver should be warmed up at least 30 minutes before proceeding with alignment.
Input signal from the Generator should be kept as low as possible and still obtain usable output.

NOTE 2: *Three silver oxide batteries are required to hold the memory when main battery is disconnected. Always be sure the unit is loaded with fresh batteries or the pre-programmed channels will be lost (and will have to be re-programmed).*

NOTE 3: *For servicing VHF Mid band of European/Australian models, see Appendix on page 43.*

IF SECTION ALIGNMENT

Step 1: Connect instruments as shown below.

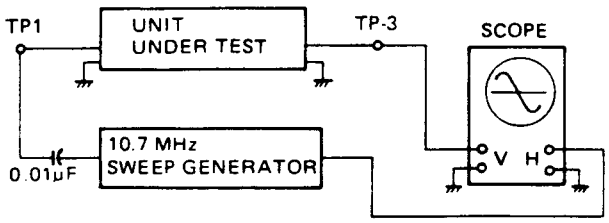

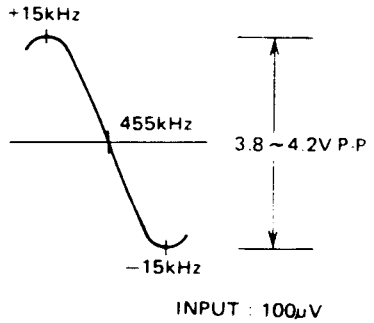

Step 2: Adjust T10 for maximum output so that the 455 kHz marker is in the center of the discriminator curve and for best linearity, as shown above.
During alignment, maintain Sweep Generator output at the lowest level possible to prevent overloading.

VCO ALIGNMENT

VHF LO BAND

Step 1: Connect a DC SSVM to TP5 and ground.
Step 2: Program CH1, 2 and 3 as follows:
CH1 (30 MHz), CH2 (40 MHz), CH3 (54 MHz).
Step 3: Select Channel 3 (54 MHz) and adjust TC3 for 13V on the DC SSVM.
Step 4: Select Channel 1 (30 MHz) and adjust T7 for 1.0V on the DC SSVM.
Step 5: Repeat steps 3 and 4 until no improvement is observed. The DC SSVM should read as below.

30 MHz	Voltage at TP5	0.9 – 1.0V
40 MHz	Voltage at TP5	4.1 – 4.5V
54 MHz	Voltage at TP5	12.5 – 13.1V

REFERENCE FREQUENCY OSC ALIGNMENT

Step 1: Connect Frequency Counter to Q7 Collector through a ceramic capacity (47 ~ 100 pF) and ground.
Step 2: Select Channel 2 (40 MHz) and observe VCO Frequency.
Step 3: Adjust TC6 so that the frequency is 50.700 MHz ±20 Hz.
Step 4: Repeat VHF LO BAND VCO ALIGNMENT.

AIRCRAFT HI BAND AND UHF BAND

Step 1: Connect a DC SSVM to TP-5 and ground.
Step 2: Program CH1, 2, and 3 ~ 9 as follows:
CH1 (108 MHz), CH2 (380 MHz), CH3 (138 MHz), CH4 (120 MHz), CH5 (150 MHz), CH6 (450 MHz), CH7 (136 MHz), CH8 (174 MHz), CH9 (512 MHz).
Step 3: Select Channel 9 (512 MHz) and adjust TC4 for 13V on the DC SSVM.
Step 4: Select Channel 1 (108 MHz) and adjust T8 for 1.0V on the DC SSVM.
Step 5: Repeat steps 3 and 4 until no improvement is observed. The DC SSVM should read as below.

108 MHz	Voltage at TP5	0.9 – 1.1V
380 MHz	Voltage at TP5	1.2 – 2.0V
138 MHz	Voltage at TP5	1.8 – 2.5V
120 MHz	Voltage at TP5	2.2 – 3.0V
150 MHz	Voltage at TP5	3.7 – 4.7V
450 MHz	Voltage at TP5	5.5 – 6.6V
136 MHz	Voltage at TP5	5.6 – 6.5V
174 MHz	Voltage at TP5	9.8 – 11.0V
512 MHz	Voltage at TP5	12.5 – 13.1V

RF AMP ALIGNMENT

VHF LO BAND

Step 1: Connect instruments as shown below.

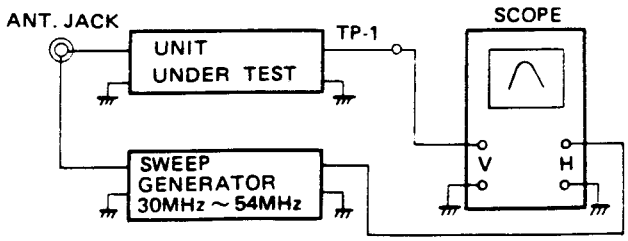

Step 2: Program 30 MHz (CH1), 40 MHz (CH2) and 54 MHz (CH3).
Step 3: Select Channel 2 (40 MHz) and adjust T3 and T6 as shown below RF waveform.
Step 4: Check Channels 1 through 3 for the below RF waveform. A slight deviation as shown below is acceptable.

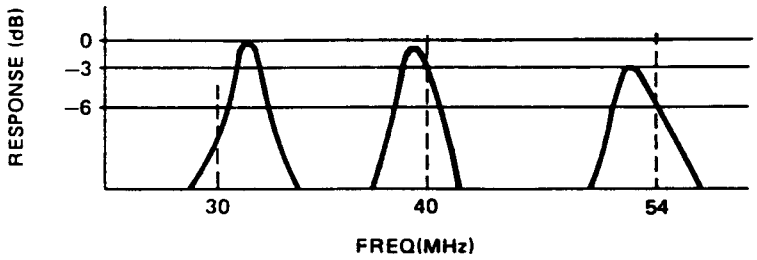

AIRCRAFT BAND

Step 1: Connect instruments: Same connection as VHF Lo band except Sweep Generator frequency, change to 108 MHz to 174 MHz.
Step 2: Program 108 MHz (CH1), 127 MHz (CH2), 136 MHz (CH3)
Step 3: Select Channel 2 (127 MHz) and adjust T1 and T4 for maximum RF waveform.
Step 4: Check Channels 1 through 3 for maximum RF waveform. Slight deviation as shown below is acceptable.

NOTE: Perform AIRCRAFT BAND RF AMP ALIGNMENT before VHF-HI BAND.
If this procedure is not followed, alignment may be impossible and/or inaccurate.

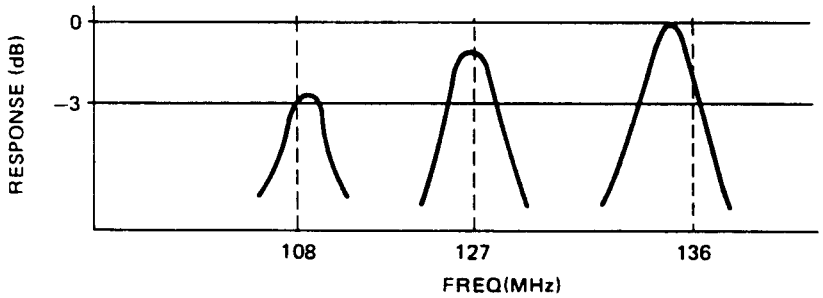

VHF-HI BAND

138 MHz (CH1), 154 MHz (CH2), 174 MHz (CH3)

Step 1: Connect instruments: Same connection as VHF Lo band except Sweep Generator frequency, change to 138 MHz to 174 MHz.

Step 2: Program 138 MHz (CH1), 154 MHz (CH2), 174 MHz (CH3).

Step 3: Select Channel 2 (154 MHz) and adjust T2 and T5 for maximum RF waveform.

Step 4: Check Channels 1 through 3 for maximum RF waveform. Slight deviation as shown below is acceptable.

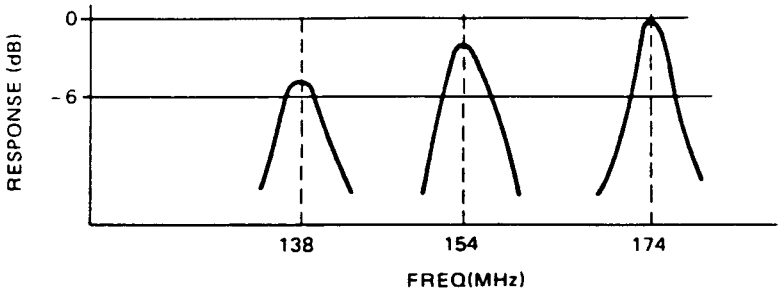

UHF BAND

Step 1: Connect instruments as shown below.

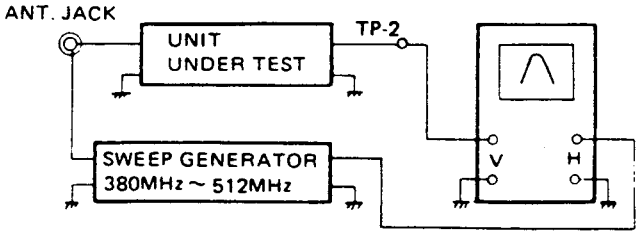

Step 2: Program 380 MHz (CH1), 450 MHz (CH2) and 512 MHz (CH3).

Step 3: Select Channel 1 (380 MHz) and adjust TC1 and TC2 as shown below.

Step 4: Check Channels 1 ~ 3 for the below RF waveform at each frequency marker. A slight deviation as shown below is acceptable.

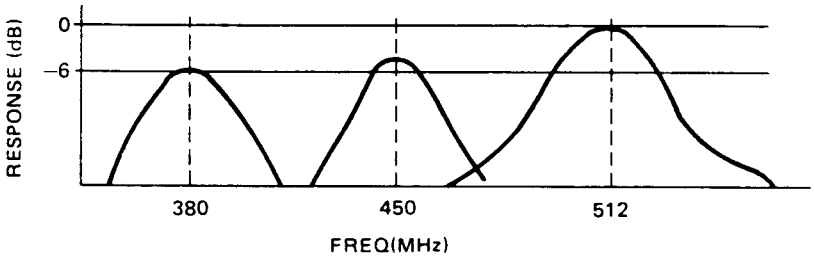

ZEROMATIC FUNCTION AND HOW TO CHECK IT

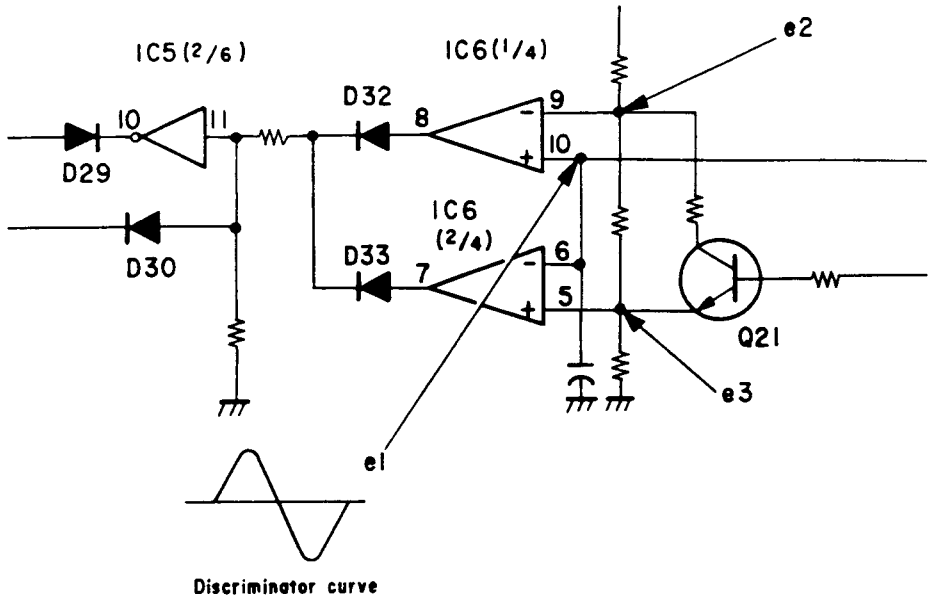

(Zeromatic functions when OUTPUT is in "H" level.)

	$0 < e_1 < e_3$	$e_3 < e_1 < e_2$	$e_2 < e_1 < V_{CC}$
OUTPUT (IC5 Pin No. 10)	L	H	L

To adjust e_1 voltage, receive signal in Manual mode, and set T10 to obtain 2.8V ($1/2V_{CC}$) at TP-3. It is convenient to use the National Weather Service Signal for the adjustment.
In the event Zeromatic does not function correctly, refer to "REFERENCE FREQUENCY OSC ALIGNMENT" and check 50.700 MHz ±20 Hz, and adjust T10 again at 2.8V DC while a Signal is being received.

KEYS ACCESS PULSE OUTPUT(IC11)

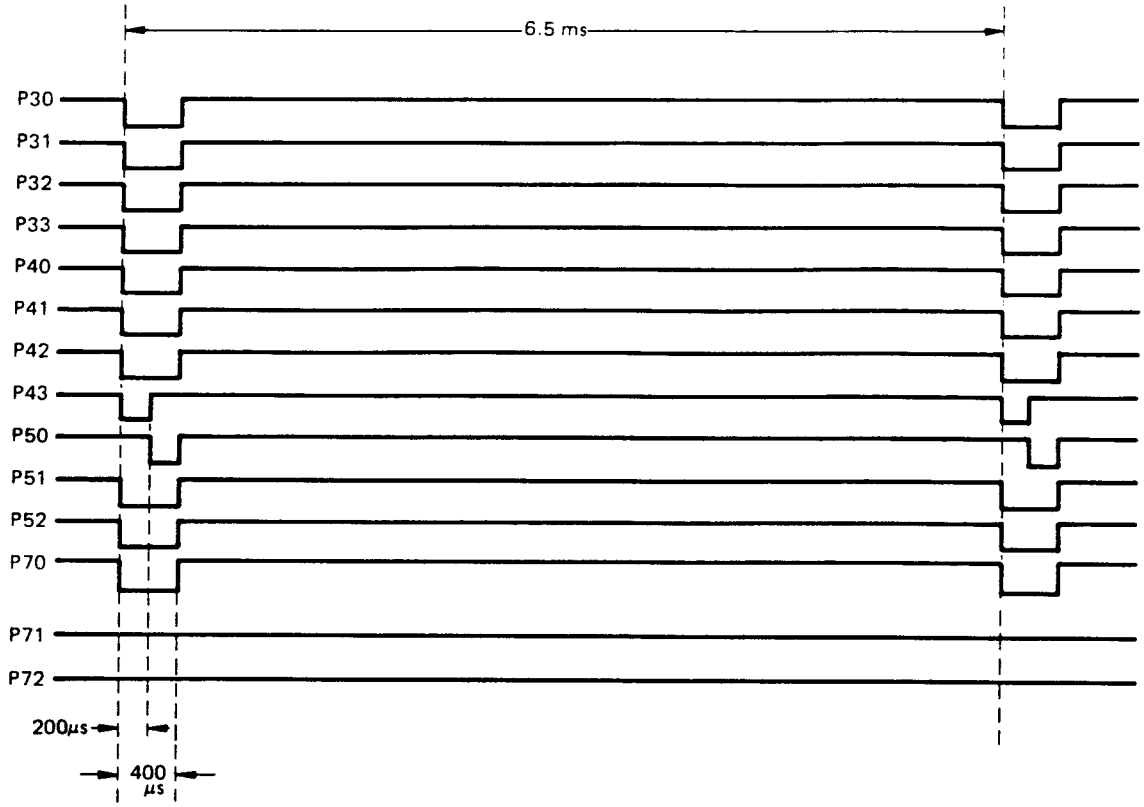

NOTE: Use a signal at Pin 66 of IC11 as trigger, and then observe the keys access pulse when PROGRAM key is pressed.

PLL DATA WAVEFORM(IC11)

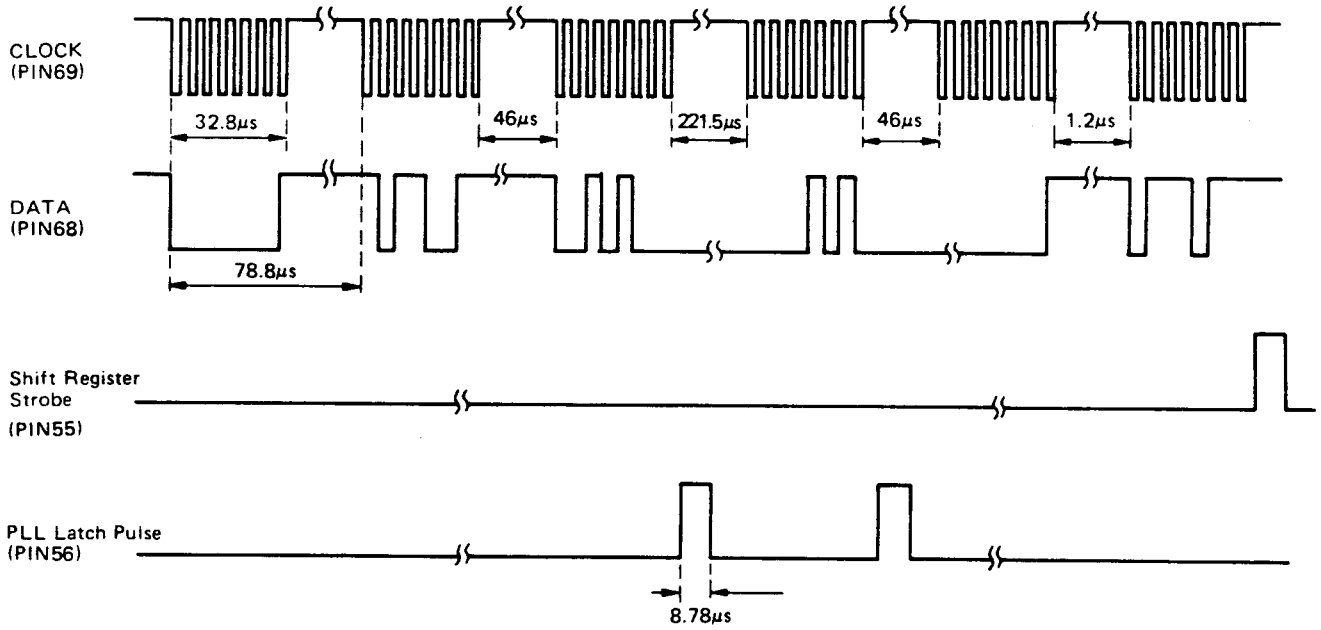

NOTE: Enter 150.000 MHz to channel 1 and lock out other channels.
Observe the waveforms while scanning.

RECEPTION CHECK

NOTE: 1→5.5V
0→0V

Table-1

FREQ. BAND \ Q10 ~ Q13 COLLECTOR V	Q10	Q11	Q12	Q13
LOW or MID	1	0	0	0
UHF	0	1	0	0
HI	0	0	1	0
AIR	0	0	0	1

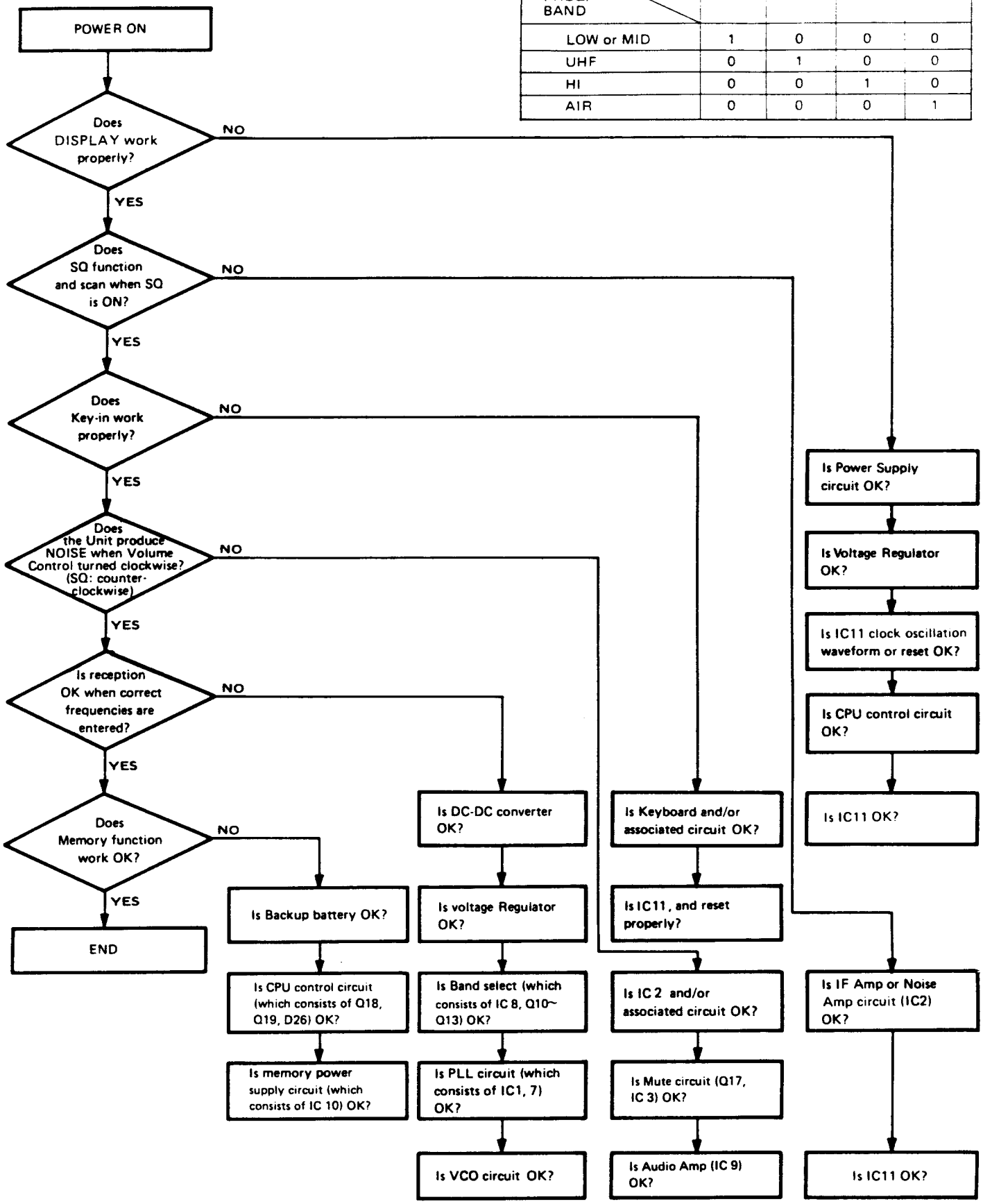

MEMORY CHECK

NOTE 1: Prior to checking CPU System, measure supply voltage to ICs. (See schematic drawing.)

NOTE 2: While checking the following items, the ICs can "latch up". If so push RESET switch about one second and then continue.

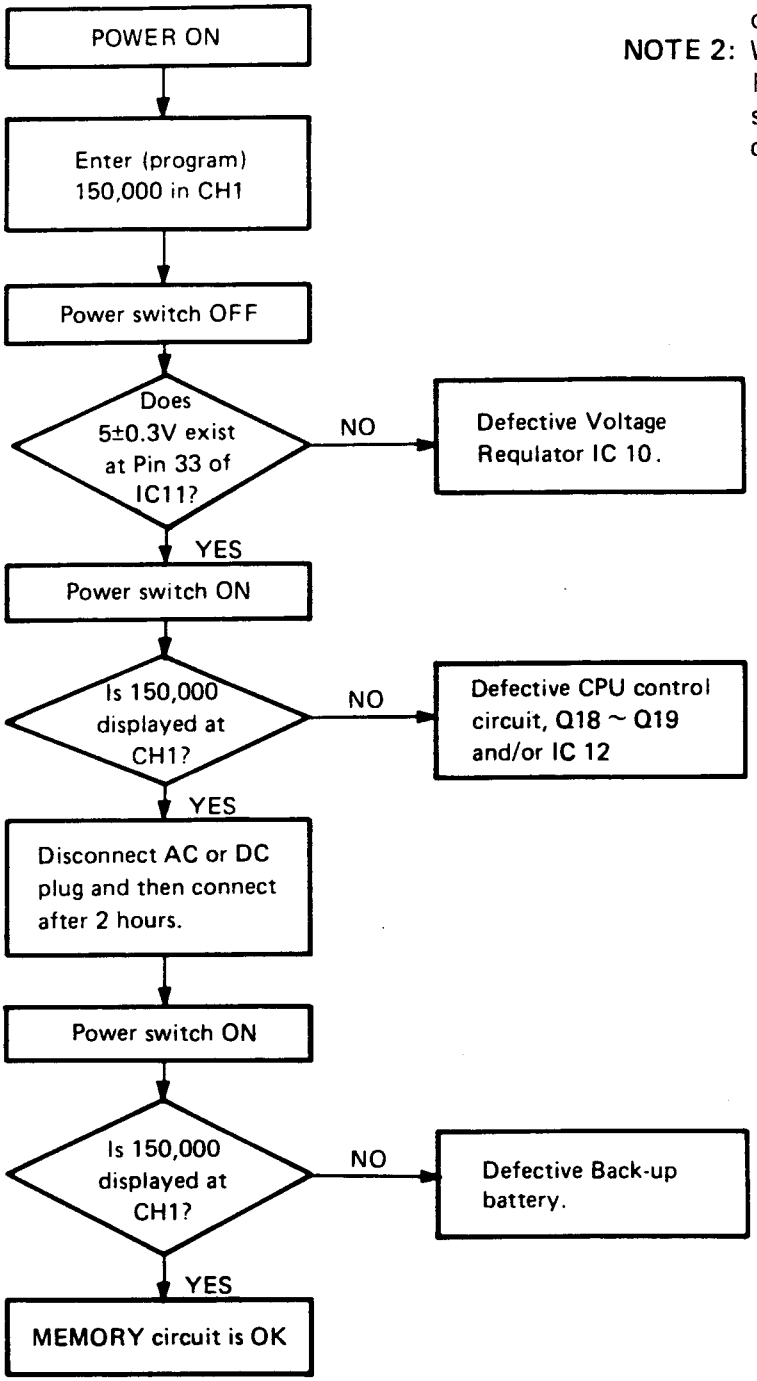

TROUBLESHOOTING

Symptom	Cause/Remedy
1) Display does not light and no sound when POWER is on. Volume Control : MAX. Squelch Control : Counterclockwise (CCW)	1) Faulty power cord: • Replace the power cord. 2) Defective power transformer: • Replace the power transformer. 3) Defective power switch: • Replace the Volume control (VR-2). 4) Defective rectifier D43: • Replace the D43. 5) Defective voltage regulator circuit components: • Replace the defective parts.
2) Display lights but no sound. Volume Control : MAX. Squelch Control : CCW	1) Defective speaker or headphone jack: • Replace the defective parts. 2) Defective audio amplifier IC-9 and/or associated circuit components: • Replace the defective parts. 3) Defective IF amplifier IC-2 and/or associated circuit components: • Replace the defective parts. 4) Defective functional squelch control IC-3, IC-5 and/or associated circuit components: • Replace the defective parts.
3) Sound but display does not light. Volume Control : MAX. Squelch Control : CCW	1) IC-11 is running "wild": • Activate Reset Switch. 2) Defective initiate control and/or associated circuit components: • Replace the defective parts. 3) Defective IC-4 and/or associated circuit components: • Replace the defective parts. 4) Defective DC-DC converter circuit components: • Replace the defective parts. 5) Defective LCD: • Replace. 6) Defective CPU IC-11 and/or associated circuit components: • Replace the defective parts. 7) Defective Q18, 19, D26 and/or associated circuit components: • Replace the defective parts. 8) Defective EL1 and/or associated circuit components: • Replace the defective parts.
4) Does not scan and squelch does not operate.	1) Defective functional squelch control IC-5, Q17 and/or associated circuit components: • Replace the defective parts. 2) Defective IC-2 and/or associated circuit components: • Replace the defective parts. 3) Defective IC-4 and/or associated circuit components: • Replace the defective parts.
5) Does not scan but squelch operates.	1) Defective Q17, IC-5 and/or associated circuit components: • Replace the defective parts. 2) IC-11 is running "wild": • Replace Reset Switch. 3) Defective IC-11 and/or associated circuit components: • Replace the defective parts.
6) Scan does not operate but MANUAL selector operates.	Squelch control is not adjusted correctly: • Adjust SQUELCH (VR-1) clockwise.

Symptom	Cause/Remedy
7) Display lights but PROGRAM does not operate.	Defective Keyboard or connector and/or associated circuit components: ● Replace the defective parts.
8) Low (Mid) band does not operate but Air, High and UHF operates.	1) Defective Low band RF Coils T-3, 6 and/or VCO circuit components: ● Replace the defective parts. 2) Defective band switch circuit components: ● Replace the defective parts.
9) Air band does not operate but Low, High and UHF operate.	Defective AM IF Amp Q15, 16 and/or associated circuit components: ● Replace the defective parts.
10) High band does not operate but Low and UHF operate.	1) Defective Air and High band RF Coils T1,2,4,5 and/or associated circuit components: ● Replace the defective parts. 2) Defective band switch circuit components: ● Replace the defective parts.
11) UHF band does not operate but Air, High and Low operate.	1) Defective UHF band RF amplifier Q4, mixer Q5, multiplier and/or associated circuit components: ● Replace the defective parts. 2) Defective band switch circuit components: ● Replace the defective parts.
12) Air, High and UHF band do not operate but Low operates.	Defective VCO circuit Q8, D16 and/or associated circuit components: ● Replace the defective parts.
13) All bands do not operate but display OK.	1) Defective PLL circuit IC1, 7 and/or associated circuit components: ● Replace the defective parts. 2) Defective IC-4 and/or associated circuit components: ● Replace the defective parts.
14) Searches but does not halt on the correct frequency.	1) Defective Q21, IC-6 and/or associated circuit components: ● Replace the defective parts. 2) Discriminator Coil T10 is out of adjustment: ● TP3 shall have 1/2 VCC (approx. 2.8V) in normal receiving mode. 3) Is 50.700 MHz adjusted correctly?: ● Refer to page 9 REFERENCE FREQUENCY OSC ALIGNMENT.

P.C. BOARDS (TOP AND BOTTOM VIEWS)

(TOP VIEW)

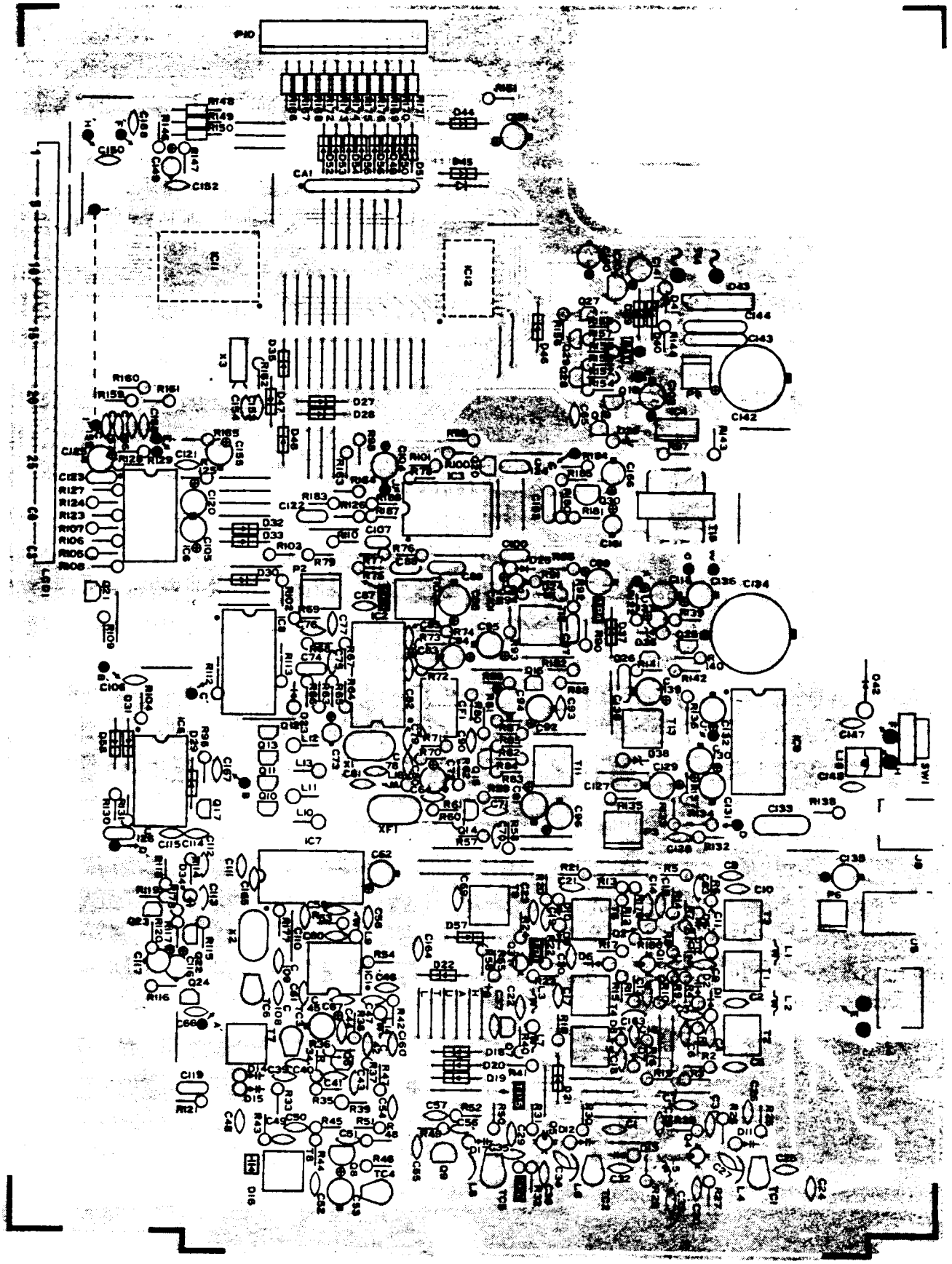

(BOTTOM VIEW)

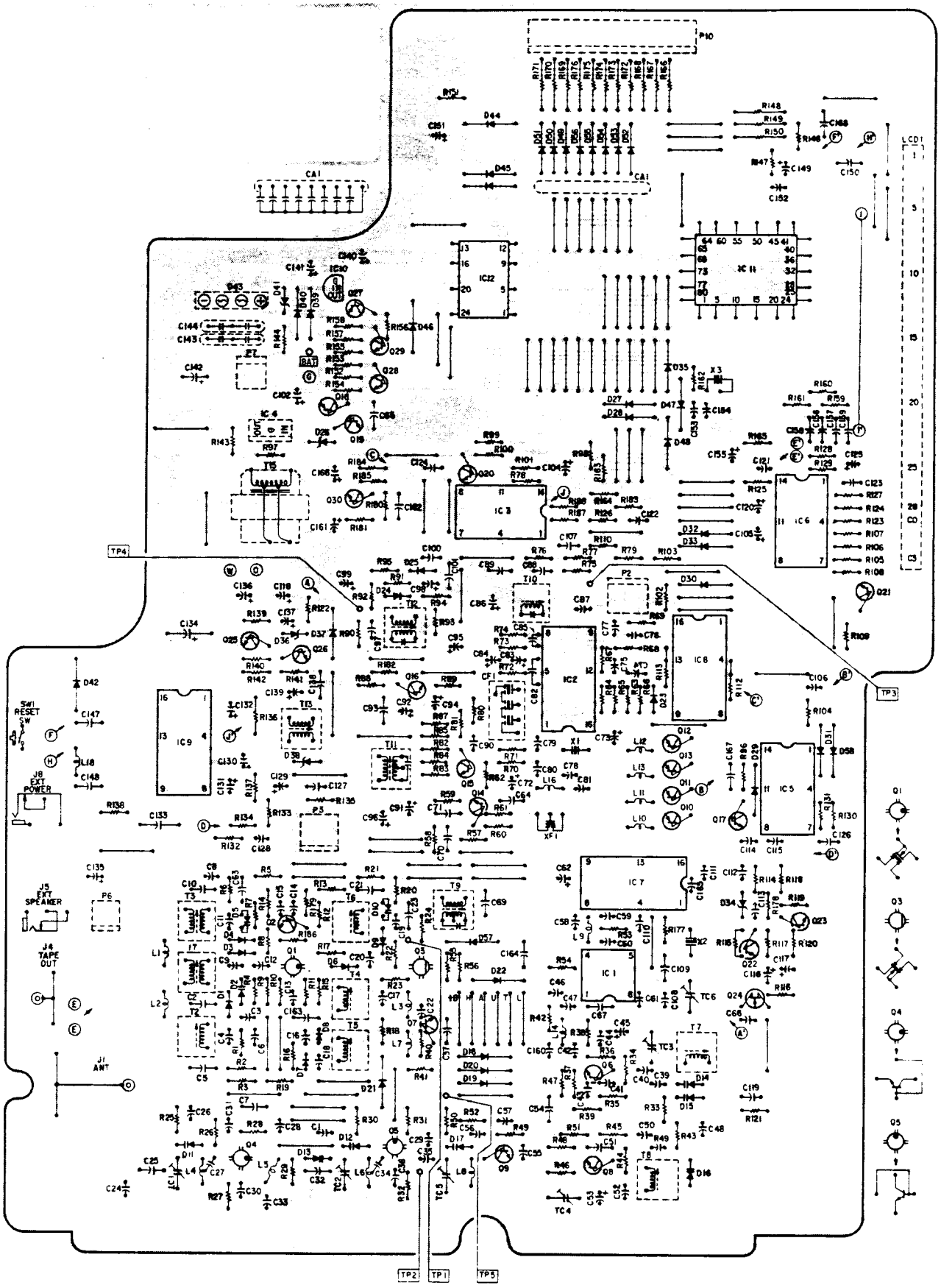
P10
CA1
LCD1
IC 11
IC 12
IC 3
IC 6
IC 8
IC 2
IC 9
IC 5
IC 7
IC 1
SW1 RESET SW
J8 EXT POWER
J5 EXT SPEAKER
J4 TAPE OUT
J1 ANT
TP1
TP2
TP3
TP4
TP5

WIRING DIAGRAM

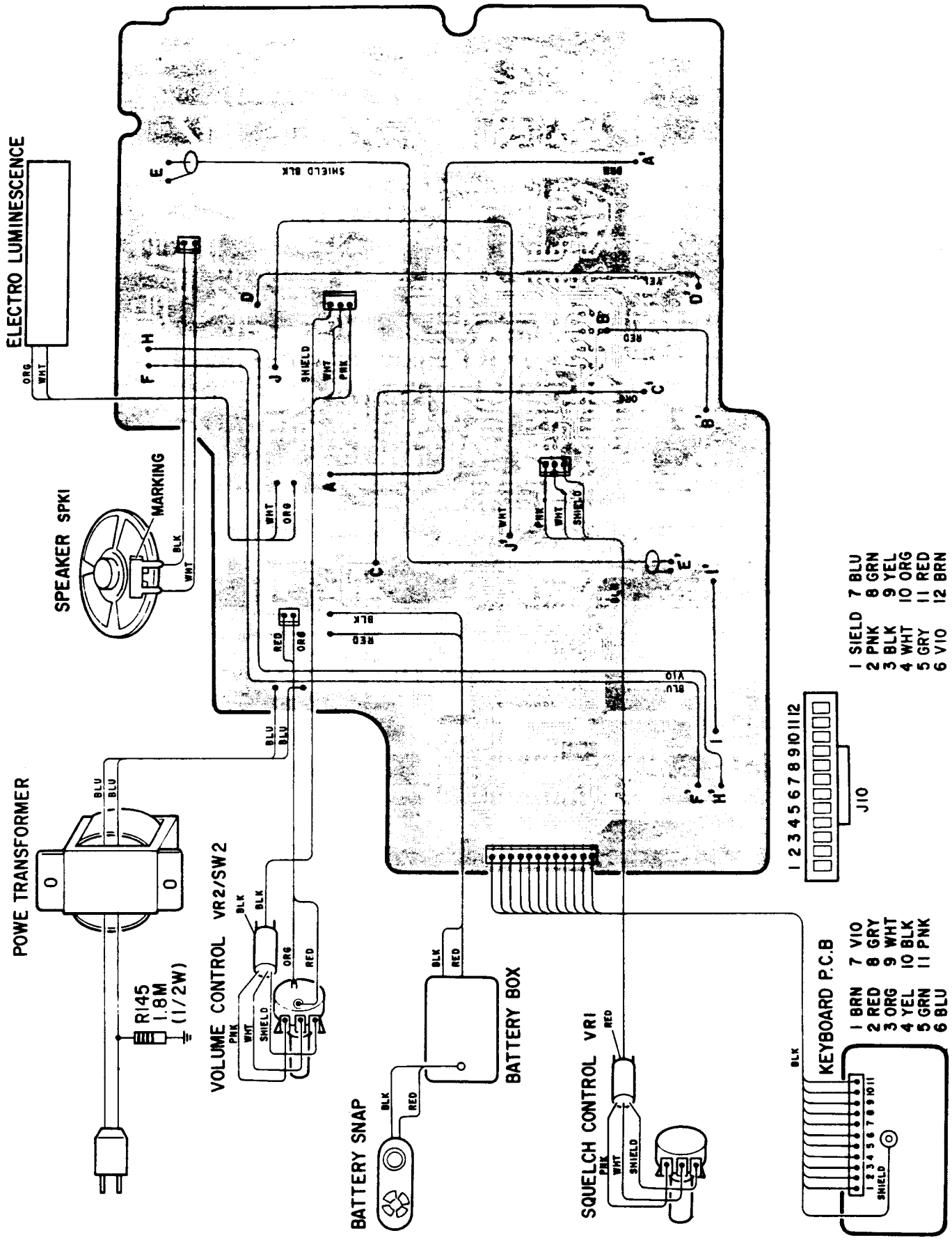

ELECTRICAL PARTS LIST

PRODUCT SAFETY NOTE: Products marked with a ⚠ have special characteristics important to safety. Before replacing any of these components, read carefully the product safety notice of this service manual. Don't degrade the safety of the product through improper servicing.

CAPACITORS						
Ref. No.	Description				RS Part Number	MFR's Part Number
C1	Ceramic	0.01μF	50WV	+80%–20%		DD106F103Z50
C2	Ceramic	0.01μF	50WV	+80%–20%		DD106F103Z50
C3	Ceramic	0.001μF	50WV	±10%		DD104B102K50
C4	Ceramic	1pF	50WV	±0.25pF		DD104SL010C50
C5	Ceramic	0.01μF	50WV	+80%–20%		DD106F103Z50
C6	Ceramic	0.001μF	50WV	±10%		DD104B102K50
C7	Ceramic	0.01μF	50WV	+80%–20%		DD106F103Z50
C8	Ceramic	0.001μF	50WV	±10%		DD104B102K50
C9	Ceramic	330pF	50WV	±10%		DD104B331K50
C10	Ceramic	0.01μF	50WV	+80%–20%		DD106F103Z50
C11	Ceramic	0.001μF	50WV	±10%		DD104B102K50
C12	Ceramic	22pF	50WV	±5%		DD104SL220J50
C13	Ceramic	0.001μF	50WV	±10%		DD104B102K50
C14	Ceramic	0.001μF	50WV	±10%		DD104B102K50
C15	Ceramic	0.001μF	50WV	±10%		DD104B102K50
C16	Ceramic	330pF	50WV	±10%		DD104B331K50
C17	Ceramic	0.001μF	50WV	±10%		DD104B102K50
C18	Ceramic	0.001μF	50WV	±10%		DD104B102K50
C19	Ceramic	0.001μF	50WV	±10%		DD104B102K50
C20	Ceramic	10pF	50WV	±0.5pF		DD104SL100D50
C21	Ceramic	0.01μF	50WV	+80%–20%		DD106F103Z50
C22	Ceramic	0.001μF	50WV	±10%		DD104B102K50
C23	Ceramic	0.01μF	50WV	+80%–20%		DD106F103Z50
C24	Ceramic	2pF	50WV	±0.25pF		DD104SL020C50
C25	Ceramic	5pF	50WV	±0.25pF		DD104SL050C50
C26	Ceramic	0.001μF	50WV	±10%		DD104B102K50
C27	Ceramic	5pF	50WV	±0.25pF		DD104SL050C50
C28	Ceramic	0.001μF	50WV	±10%		DD104B102K50
C29	Ceramic	0.001μF	50WV	±10%		DD104B102K50
C30	Ceramic	100pF	50WV	±5%		DD105SL101J50
C31	Ceramic	33pF	50WV	±5%		DD104SL330J50
C32	Ceramic	10pF	50WV	±0.5pF		DD104SL100D50
C33	Ceramic	0.001μF	50WV	±10%		DD104B102K50
C34	Ceramic	10pF	50WV	±0.5pF		DD104SL100D50
C35	Ceramic	2pF	50WV	±0.25pF		DD104SL020C50
C36	Ceramic	0.001μF	50WV	±10%		DD104B102K50
C37	Ceramic	0.01μF	50WV	+80%–20%		DD106F103Z50
C38	Not used					
C39	Ceramic	0.001μF	50WV	±10%		DD104B102K50
C40	Ceramic	33pF	50WV	±5%		DD104SL330J50
C41	Ceramic	56pF	50WV	±5%		DD104SL560J50
C42	Ceramic	22pF	50WV	±5%		DD104SL220J50
C43	Ceramic	10pF	50WV	±0.5pF		DD104SL100D50
C44	Ceramic	0.001μF	50WV	±10%		DD104B102K50
C45	Electrolytic	10μF	16WV	±20%		16MV100HA
C46	Ceramic	47pF	50WV	±5%		DD104SL470J50
C47	Ceramic	47pF	50WV	±5%		DD104SL470J50
C48	Ceramic	0.001μF	50WV	±10%		DD104B102K50
C49	Ceramic	470pF	50WV	±10%		DD104B471K50
C50	Ceramic	47pF	50WV	±5%		DD104SL470J50
C51	Ceramic	10pF	50WV	±0.5pF		DD104SL100D50

* Mylar is a registered trademark of E.I. Du Pont de Nemours and Company.

Ref. No.	Description				RS Part Number	MFR's Part Number
C52	Ceramic	0.001μF	50WV	±10%		DD104B102K50
C53	Electrolytic	47μF	16WV	±20%		16MV470HA
C54	Ceramic	5pF	50WV	±0.25pF		DD104SL050C50
C55	Ceramic	10pF	50WV	±0.5pF		DD104SL100D50
C56	Ceramic	22pF	50WV	±5%		DD104SL220J50
C57	Ceramic	0.001μF	50WV	±10%		DD104B102K50
C58	Ceramic	0.001μF	50WV	±10%		DD104B102K50
C59	Ceramic	220pF	50WV	±10%		DD104B221K50
C60	Ceramic	47pF	50WV	±5%		DD104SL470J50
C61	Ceramic	0.001μF	50WV	±10%		DD104B102K50
C62	Electrolytic	47μF	16WV	±20%		16MV470HA
C63	Ceramic	0.01μF	50WV	+80%–20%		DD106F103Z50
C64	Ceramic	0.01μF	50WV	+80%–20%		DD106F103Z50
C65	Ceramic	0.01μF	50WV	+80%–20%		DD106F103Z50
C66	Ceramic	0.001μF	50WV	±10%		DD104B102K50
C67	Ceramic	0.01μF	50WV	+80%–20%		DD106F103Z50
C68	Not used					
C69	Ceramic	0.01μF	50WV	+80%–20%		DD106F103Z50
C70	Ceramic	0.001μF	50WV	±10%		DD104B102K50
C71	Ceramic	0.01μF	50WV	+80%–20%		DD106F103Z50
C72	Electrolytic	47μF	16WV	±20%		16MV470HA
C73	Tantalum	0.22μF	35WV	±10%		DN1VR22K1S
C74	Mylar	0.01μF	50WV	±10%		AK1-UU103K
C75	Ceramic	5pF	50WV	±0.25pF		DD104SL050C50
C76	Ceramic	470pF	50WV	±10%		DD104B471K50
C77	Ceramic	470pF	50WV	±10%		DD104B471K50
C78	Ceramic	39pF	50WV	±5%		DD104SL390J50
C79	Ceramic	0.001μF	50WV	±10%		DD104B102K50
C80	Ceramic	22pF	50WV	±5%		DD104SL220J50
C81	Ceramic	100pF	50WV	±5%		DD105SL101J50
C82	Ceramic	0.047μF	50WV	+80%–20%		DD110F473Z50
C83	Tantalum	0.47μF	35WV	±10%		DN1VR47K1S
C84	Tantalum	0.47μF	35WV	±10%		DN1VR47K1S
C85	Ceramic	10pF	50WV	±0.5pF		DD104SL100D50
C86	Electrolytic	220μF	10WV	±20%		10MV221HA
C87	Ceramic	0.001μF	50WV	±10%		DD104B102K50
C88	Mylar	0.01μF	50WV	±10%		AK1-UU103K
C89	Mylar	0.1μF	50WV	±10%		AK1-UU104K
C90	Ceramic	470pF	50WV	±10%		DD104B471K50
C91	Electrolytic	1μF	50WV	±20%		50MV010HA
C92	Electrolytic	10μF	16WV	±20%		16MV100HA
C93	Ceramic	0.01μF	50WV	+80%–20%		DD106F103Z50
C94	Electrolytic	1μF	50WV	±20%		50MV010HA
C95	Electrolytic	10μF	16WV	±20%		16MV100HA
C96	Electrolytic	47μF	16WV	±20%		16MV470HA
C97	Mylar	0.01μF	50WV	±10%		AK1-UU103K
C98	Tantalum	0.47μF	35WV	±10%		DN1VR47K1S
C99	Electrolytic	1μF	50WV	±20%		50MV010HA
C100	Mylar	0.033μF	50WV	±10%		AK1-UU333K
C101	Mylar	0.047μF	50WV	±10%		AK1-UU473K
C102	Electrolytic	47μF	16WV	±20%		16MV470HA
C103	Not used					
C104	Electrolytic	0.47μF	50WV	±20%		50MR47HA
C105	Electrolytic	0.1μF	50WV	±20%		50MV0R1HA
C106	Ceramic	0.001μF	50WV	±10%		DD104B102K50
C107	Myiar	0.022μF	50WV	±10%		AK1-UU223K
C108	Ceramic	33pF	50WV	±5%		DD105CH330J50
C109	Ceramic	56pF	50WV	±5%		DD106CH560J50

Ref. No.	Description				RS Part Number	MFR's Part Number
C110	Ceramic	0.1μF	50WV	±20%		SR295C104M
C111	Ceramic	220pF	50WV	±10%		DD104B221K50
C112	Ceramic	22pF	50WV	±5%		DD104SL220J50
C113	Ceramic	0.0047μF	50WV	±10%		DD108B472K50
C114	Ceramic	220pF	50WV	±10%		DD104B221K50
C115	Ceramic	220pF	50WV	±10%		DD104B221K50
C116	Tantalum	1μF	35WV	±10%		DN1V010K1S
C117	Tantalum	0.33μF	35WV	±10%		DN1VR33K1S
C118	Electrolytic	4.7μF	25WV	±20%		25MV4R7HA
C119	Mylar	0.01μF	50WV	±10%		AK1-UU103K
C120	Electrolytic	1μF	50WV	±20%		50MV010HA
C121	Ceramic	470pF	50WV	±10%		DD104B471K50
C122	Mylar	0.01μF	50WV	±10%		AK1-UU103K
C123	Mylar	0.0015μF	50WV	±10%		AK1-UU152K
C124	Mylar	0.033μF	50WV	±10%		AK1-UU333K
C125	Electrolytic	10μF	16WV	±20%		16MV100HA
C126	Mylar	0.0033μF	50WV	±10%		AK1-UU332K
C127	Mylar	0.022μF	50WV	±10%		AK1-UU223K
C128	Ceramic	0.001μF	50WV	±10%		DD104B102K50
C129	Electrolytic	0.1μF	50WV	±20%		50MV0R1HA
C130	Electrolytic	10μF	16WV	±20%		16MV100HA
C131	Electrolytic	10μF	16WV	±20%		16MV100HA
C132	Electrolytic	47μF	16WV	±20%		16MV470HA
C133	Mylar	0.22μF	50WV	±10%		AK1-UU224K
C134	Electrolytic	2200μF	16WV	±20%		16MV222HA
C135	Electrolytic	100μF	16WV	±20%		16MV101HA
C136	Electrolytic	10μF	16WV	±20%		16MV100HA
C137	Tantalum	0.47μF	35WV	±10%		DN1VR47K1S
C138	Mylar	0.001μF	50WV	±10%		AK1-UU102K
C139	Electrolytic	47μF	16WV	±20%		16MV470HA
C140	Tantalum	0.1μF	35WV	±10%		DN1V0R1K1S
C141	Tantalum	0.1μF	35WV	±10%		DN1V0R1K1S
⚠C142	Electrolytic	1000μF	25WV	±20%		25MV102HA
C143	Ceramic	0.01μFx2	250WV	+80%–20%		EXR-FS203ZS
C144	Ceramic	0.01μFx2	250WV	+80%–20%		EXR-FS203ZS
C145	Not used					
C146	Not used					
C147	Ceramic	0.01μF	50WV	+80%–20%		DD106F103Z50
C148	Ceramic	0.01μF	50WV	+80%–20%		DD106F103Z50
C149	Electrolytic	1μF	50WV	±20%		50MV010HA
C150	Ceramic	0.001μF	50WV	±10%		DD104B102K50
C151	Electrolytic	10μF	16WV	±20%		16MV100HA
C152	Ceramic	33pF	50WV	±5%		DD104SL330J50
C153	Ceramic	33pF	50WV	±5%		DD105CH330J50
C154	Ceramic	22pF	50WV	±5%		DD104CH220J50
C155	Electrolytic	1μF	50WV	±20%		50MV010HA
C156	Ceramic	0.01μF	50WV	+80%–20%		DD106F103Z50
C157	Ceramic	0.01μF	50WV	+80%–20%		DD106F103Z50
C158	Ceramic	0.01μF	50WV	+80%–20%		DD106F103Z50
C159	Ceramic	0.01μF	50WV	+80%–20%		DD106F103Z50
C160	Ceramic	47pF	50WV	±5%		DD104SL470J50
C161	Tantalum	6.8μF	10WV	±10%		DN1A6R8K1S
C162	Mylar	0.047μF	50WV	±10%		AK1-UU473K
C163	Ceramic	0.01μF	50WV	+80%–20%		DD106F103Z50
C164	Ceramic	0.01μF	50WV	+80%–20%		DD106F103Z50
C165	Ceramic	220pF	50WV	±10%		DD104B221K50
C166	Electrolytic	100μF	16WV	±20%		16MV101HA
C167	Ceramic	0.01μF	50WV	+80%–20%		DD106F103Z50
C168	Ceramic	0.01μF	50WV	+80%–20%		DD106F103Z50

CAPACITOR ARRAY			
Ref. No.	Description	RS Part Number	MFR's Part Number
CA1	Array Capacitor 100pFx8 50WV ±20%		EXF-P8101MW

CRYSTALS & FILTERS			
Ref. No.	Description	RS Part Number	MFR's Part Number
X1	Crystal (10.245 MHz)	MX-1281	T5717/H5717
X2	Crystal (6.400 MHz)	MX-1247	6.400 MHz
X3	Crystal (32.768 kHz)	MX-1039	32.768 kHz
XF1	Filter Crystal (10.7 MHz)	C-1149	T5718/H5718
CF1	Filter Ceramic (455 kHz)	C-1044	CFW455D

DIODES			
Ref. No.	Description	RS Part Number	MFR's Part Number
D1	1SS85 (Silicon)	DX-1462	1SS85
D2	Varactor 1SV136A (Silicon)	DX-2504	1SV136A
D3	1SS85 (Silicon)	DX-1462	1SS85
D4	1SS85 (Silicon)	DX-1462	1SS85
D5	Varactor BB329 (Silicon)	DX-1739	BB329
D6	1SS85 (Silicon)	DX-1462	1SS85
D7	Varactor 1SV136A (Silicon)	DX-2504	1SV136A
D8	1SS85 (Silicon)	DX-1462	1SS85
D9	1SS85 (Silicon)	DX-1462	1SS85
D10	Varactor BB329 (Silicon)	DX-1739	BB329
D11	Varactor 1SV145B (Silicon)	DX-2512	1SV145B
D12	Varactor 1SV145B (Silicon)	DX-2512	1SV145B
D13	Varactor 1S2076A (Silicon)	DX-1056	1S2076A
D14	Varactor BB329 (Silicon)	DX-1739	BB329
D15	Varactor BB329 (Silicon)	DX-1739	BB329
D16	Varactor 1SV145B (Silicon)	DX-2512	1SV145B
D17	Varactor 1SV145B (Silicon)	DX-2512	1SV145B
D18	1S2076A (Silicon)	DX-1056	1S2076A
D19	1S2076A (Silicon)	DX-1056	1S2076A
D20	1S2076A (Silicon)	DX-1056	1S2076A
D21	1S2076A (Silicon)	DX-1056	1S2076A
D22	1S2076A (Silicon)	DX-1056	1S2076A
D23	1K261 (Germanium)	DX-1325	1K261
D24	1K261 (Germanium)	DX-1325	1K261
D25	1K261 (Germanium)	DX-1325	1K261
D26	Zener HZ4BLL (Silicon)	DX-2673	HZ4BLL
D27	1S2076A (Silicon)	DX-1056	1S2076A
D28	1S2076A (Silicon)	DX-1056	1S2076A
D29	1S2076A (Silicon)	DX-1056	1S2076A

Ref. No.	Description			RS Part Number	MFR's Part Number
D30		1S2076A	(Silicon)	DX-1056	1S2076A
D31		1S2076A	(Silicon)	DX-1056	1S2076A
D32		1S2076A	(Silicon)	DX-1056	1S2076A
D33		1S2076A	(Silicon)	DX-1056	1S2076A
D34	Zener	HZ12C2L	(Silicon)	DX-1056	HZ12C2L
D35		1S2076A	(Silicon)	DX-1056	1S2076A
D36	Zener	HZ16-3L	(Silicon)		HZ16-3L
D37		1S2076A	(Silicon)	DX-1056	1S2076A
D38	Zener	HZ7B2L	(Silicon)	DX-2543	HZ7B2L
D39		1S2076A	(Silicon)	DX-1056	1S2076A
D40		1S2076A	(Silicon)	DX-1056	1S2076A
D41	Zener	HZ12C2L	(Silicon)		HZ12C2L
D42		S5277B	(Silicon)		S5277B
D43	Rectifier	1B4B41	(Silicon)	DX-2513	1B4B41
D44		1S2076A	(Silicon)	DX-1056	1S2076A
D45		1S2076A	(Silicon)	DX-1056	1S2076A
D46		1S2076A	(Silicon)	DX-1056	1S2076A
D47		1S2076A	(Silicon)	DX-1056	1S2076A
D48		1S2076A	(Silicon)	DX-1056	1S2076A
D49		1S2076A	(Silicon)	DX-1056	1S2076A
D50		1S2076A	(Silicon)	DX-1056	1S2076A
D51		1S2076A	(Silicon)	DX-1056	1S2076A
D52		1S2076A	(Silicon)	DX-1056	1S2076A
D53		1S2076A	(Silicon)	DX-1056	1S2076A
D54		1S2076A	(Silicon)	DX-1056	1S2076A
D55		1S2076A	(Silicon)	DX-1056	1S2076A
D56		1S2076A	(Silicon)	DX-1056	1S2076A
D57		1S2076A	(Silicon)	DX-1056	1S2076A
D58		1S2076A	(Silicon)	DX-1056	1S2076A

INTEGRATED CIRCUITS

Ref. No.	Description		RS Part Number	MFR's Part Number
IC1	MB504P-G	(PLL/Prescaler) (Bipolar)		MB504P-G
IC2	TK10420	(IF Amp./Det.) (Bipolar)	MX-4012	TK10420
IC3	TC4066BP	(Mute/Band Selector/Quad) (C-MOS)	MX-6046	TC4066BP
IC4	TA78006AP	(Voltage Regulator) (Bipolar)		TA78006AP
IC5	μPD4069UBP /TC4069UBP	(SQ. Cont./Beep Tone Gen) (C-MOS)	MX-5514	μPD4069UBC /TC4069UBP
IC6	μPC324C/LA6324	(Zeromatic Cont./Audio Amp) (Bipolar)		μPC324C/LA6324
IC7	MC145158	(PLL) (C-MOS)	MX-4014	MC145158
IC8	μPD4094BC	(Band Selector) (C-MOS)	MX-5546	μPD4094BC
IC9	TDA1905	(Audio Power Amp) (Bipolar)	MX-6439	TDA1905
IC10	S-81250HG	(CPU/Voltage Regulator) (C-MOS)		S-81250HG
IC11	GRE-0437A	(CPU) (C-MOS)		GRE-0437A
IC12	μPD446G-20 /TC5517CF-20	(Memory Back Up) (C-MOS)		μPD446G-20 /TC5517CF-20

COILS & TRANSFORMERS			
Ref. No.	Description	RS Part Number	MFR's Part Number
L1	RFC (Low)	CA-3488	4LNC092
L2	RFC (Aircraft/Hi)	CA-3942	4LNC122
L3	RFC (Low)	CA-3488	4LNC092
L4	Coil, RF (UHF)	CA-4654	8LNR093
L5	RFC (Aircraft Hi)	CA-3942	4LNC122
L6	Coil, RF (UHF)	CA-4654	8LNR093
L7	Coil, Choke (0.22μH)		LAL03VSR22M
L8	Coil, RF (UHF)	CA-4654	8LNR093
L9	Coil, Choke (10μH)	CB-2076	LAL03VS100K
L10	Coil, Choke (10μH)	CB-2076	LAL03VS100K
L11	Coil, Choke (10μH)	CB-2076	LAL03VS100K
L12	Coil, Choke (10μH)	CB-2076	LAL03VS100K
L13	Coil, Choke (10μH)	CB-2076	LAL03VS100K
L14	Coil, Choke (3.9μH)		LAL03VS3R9K
L15	Not used		
L16	Coil, Choke (10μH)	CB-2076	LAL03VS100K
L17	Not used		
L18	Coil, Choke		3B-037
T1	Coil, RF (Aircraft)	CA-9876	GR-N783
T2	Coil, RF (Hi)	CA-9880	GR-N784
T3	Coil, RF (Low)	CA-2092	GR-N5341
T4	Coil, RF (Aircraft)	CA-9876	GR-N783
T5	Coil, RF (Hi)	CA-9880	GR-N784
T6	Coil, RF (Low)	CA-2092	GR-N5341
T7	Coil, VCO (Low)		GR-N790
T8	Coil, VCO (Aircraft/Hi/UHF)	CA-9890	GR-C787
T9	Coil, IF (10.7MHz)	CA-7246	GR-A470033
T10	Coil, IF (455kHz)	CA-9499	GR-P4203
T11	Coil, IF (455kHz)	CA-8183	GR-P352203
T12	Coil, IF (455kHz)	CA-7844	GR-P4202
T13	Coil, DC/DC Converter		7PSO-244
⚠ T14	Transformer Power		Z1739
⚠ T15	Inverter, Transformer		N19-5N75TK

TRANSISTORS			
Ref. No.	Description	RS Part Number	MFR's Part Number
Q1	FET 3SK96 (Mos)	3SK-96	3SK96
Q2	2SC2458(Y) (NPN)	2SC-2458	2SC2458(Y)
Q3	FET 3SK101(Y) (Mos)	3SK-101Y	3SK101(Y)
Q4	2SC2464 (NPN)	2SC-2464	2SC2464
Q5	2SC2466 (NPN)	2SC-2466	2SC2466
Q6	2SC2668(O,Y)(NPN)	2SC-2668O,Y	2SC2668(O,Y)
Q7	2SC2668(O,Y)(NPN)	2SC-2668O,Y	2SC2668(O,Y)
Q8	2SC2347 (NPN)	2SC-2347	2SC2347
Q9	2SC2498 (NPN)	2SC-2498	2SC2498
Q10	RN2202/UN4111 (PNP) w/Resistor	MX-4016	RN2202/UN4111
Q11	RN2202/UN4111 (PNP) w/Resistor	MX-4016	RN2202/UN4111
Q12	RN2202/UN4111 (PNP) w/Resistor	MX-4016	RN2202/UN4111

Ref. No.	Description	RS Part Number	MFR's Part Number
Q13	RN2202/UN4111 (PNP) w/Resistor	MX-4016	RN2202/UN4111
Q14	2SC2668(O,Y)(NPN)	2SC-2668O,Y	2SC2668(O,Y)
Q15	2SC2458(Y) (NPN)	2SC-2458Y	2SC2458(Y)
Q16	2SC2458(Y) (NPN)	2SC-2458Y	2SC2458(Y)
Q17	2SC2458(GR) (NPN)	2SC-2458GR	2SC2458(GR)
Q18	RN2202/UN4111 (PNP) w/Resistor	MX-4016	RN2202/UN4111
Q19	2SC2458(GR) (NPN)	2SC-2458GR	2SC2458(GR)
Q20	2SC2458(GR) (NPN)	2SC-2458GR	2SC2458(GR)
Q21	2SC2458(GR) (NPN)	2SC-2458GR	2SC2458(GR)
Q22	2SA1150(Y) (PNP)	2SA-1150Y	2SA1150(Y)
Q23	2SC2458(Y) (NPN)	2SC-2458Y	2SC2458(Y)
Q24	FET 2SK118(O,Y)	2SK-118O,Y	2SK118(O,Y)
Q25	2SC2458(GR) (NPN)	2SC-2458GR	2SC2458(GR)
Q26	2SC2458(GR) (NPN)	2SC-2458GR	2SC2458(GR)
Q27	2SA1150(Y) (PNP)	2SA-1150Y	2SA1150(Y)
Q28	2SC2458(GR) (NPN)	2SC-2458GR	2SC2458(GR)
Q29	2SC2458(GR) (NPN)	2SC-2458GR	2SC2458(GR)
Q30	2SC945(QA) (NPN)	2SC-945QA	2SC945(QA)

RESISTORS

Ref. No.	Description	RS Part Number	MFR's Part Number
R1	Carbon film 220 ohm 1/4W ±5%		R25XEL03J221
R2	Carbon film 220 ohm 1/4W ±5%		R25XEL03J221
R3	Carbon film 10k ohm 1/4W ±5%		R25XEL03J103
R4	Carbon film 47k ohm 1/4W ±5%		R25XEL03J473
R5	Carbon film 220 ohm 1/4W ±5%		R25XEL03J221
R6	Carbon film 47k ohm 1/4W ±5%		R25XEL03J473
R7	Carbon film 4.7k ohm 1/4W ±5%		R25XEL03J472
R8	Carbon film 47k ohm 1/4W ±5%		R25XEL03J473
R9	Carbon film 100k ohm 1/4W ±5%		R25XEL03J104
R10	Carbon film 47k ohm 1/4W ±5%		R25XEL03J473
R11	Carbon film 47k ohm 1/4W ±5%		R25XEL03J473
R12	Carbon film 100k ohm 1/4W ±5%		R25XEL03J104
R13	Carbon film 220 ohm 1/4W ±5%		R25XEL03J221
R14	Carbon film 47 ohm 1/4W ±5%		R25XEL03J470
R15	Carbon film 100k ohm 1/4W ±5%		R25XEL03J104
R16	Carbon film 47k ohm 1/4W ±5%		R25XEL03J473
R17	Carbon film 22 ohm 1/4W ±5%		R25XEL03J220
R18	Carbon film 220 ohm 1/4W ±5%		R25XEL03J221
R19	Carbon film 220 ohm 1/4W ±5%		R25XEL03J221
R20	Carbon film 47k ohm 1/4W ±5%		R25XEL03J473
R21	Carbon film 220 ohm 1/4W ±5%		R25XEL03J221
R22	Carbon film 47k ohm 1/4W ±5%		R25XEL03J473
R23	Carbon film 47k ohm 1/4W ±5%		R25XEL03J473
R24	Carbon film 2.2k ohm 1/4W ±5%		R25XEL03J222
R25	Carbon film 47k ohm 1/4W ±5%		R25XEL03J473
R26	Carbon film 470 ohm 1/4W ±5%		R25XEL03J471
R27	Carbon film 4.7k ohm 1/4W ±5%		R25XEL03J472
R28	Carbon film 10k ohm 1/4W ±5%		R25XEL03J103
R29	Carbon film 100 ohm 1/4W ±5%		R25XEL03J101

Ref. No.	Description				RS Part Number	MFR's Part Number
R30	Carbon film	47k ohm	1/4W	±5%		R25XEL03J473
R31	Carbon film	1M ohm	1/4W	±5%		R25XEL03J105
R32	Carbon film	1k ohm	1/4W	±5%		R25XEL03J102
R33	Carbon film	47k ohm	1/4W	±5%		R25XEL03J473
R34	Carbon film	22k ohm	1/4W	±5%		R25XEL03J223
R35	Carbon film	15k ohm	1/4W	±5%		R25XEL03J153
R36	Carbon film	2.2k ohm	1/4W	±5%		R25XEL03J222
R37	Carbon film	220 ohm	1/4W	±5%		R25XEL03J221
R38	Carbon film	3.3k ohm	1/4W	±5%		R25XEL03J332
R39	Carbon film	100 ohm	1/4W	±5%		R25XEL03J101
R40	Carbon film	100k ohm	1/4W	±5%		R25XEL03J104
R41	Carbon film	100 ohm	1/4W	±5%		R25XEL03J101
R42	Carbon film	100 ohm	1/4W	±5%		R25XEL03J101
R43	Carbon film	10k ohm	1/4W	±5%		R25XEL03J103
R44	Carbon film	22k ohm	1/4W	±5%		R25XEL03J223
R45	Carbon film	15k ohm	1/4W	±5%		R25XEL03J153
R46	Carbon film	1k ohm	1/4W	±5%		R25XEL03J102
R47	Carbon film	220 ohm	1/4W	±5%		R25XEL03J221
R48	Carbon film	220 ohm	1/4W	±5%		R25XEL03J221
R49	Carbon film	470k ohm	1/4W	±5%		R25XEL03J474
R50	Carbon film	47k ohm	1/4W	±5%		R25XEL03J473
R51	Carbon film	100 ohm	1/4W	±5%		R25XEL03J101
R52	Carbon film	1k ohm	1/4W	±5%		R25XEL03J102
R53	Carbon film	2.2k ohm	1/4W	±5%		R25XEL03J222
R54	Carbon film	22 ohm	1/4W	±5%		R25XEL03J220
R55	Carbon film	1k ohm	1/4W	±5%		R25XEL03J102
R56	Carbon film	100 ohm	1/4W	±5%		R25XEL03J101
R57	Carbon film	220k ohm	1/4W	±5%		R25XEL03J224
R58	Carbon film	5.6k ohm	1/4W	±5%		R25XEL03J562
R59	Carbon film	1k ohm	1/4W	±5%		R25XEL03J102
R60	Carbon film	2.2k ohm	1/4W	±5%		R25XEL03J222
R61	Carbon film	2.2k ohm	1/4W	±5%		R25XEL03J222
R62	Carbon film	47 ohm	1/4W	±5%		R25XEL03J470
R63	Carbon film	100k ohm	1/4W	±5%		R25XEL03J104
R64	Carbon film	27k ohm	1/4W	±5%		R25XEL03J273
R65	Carbon film	2.2k ohm	1/4W	±5%		R25XEL03J222
R66	Carbon film	4.7k ohm	1/4W	±5%		R25XEL03J472
R67	Carbon film	1M ohm	1/4W	±5%		R25XEL03J105
R68	Carbon film	2.2k ohm	1/4W	±5%		R25XEL03J222
R69	Carbon film	10k ohm	1/4W	±5%		R25XEL03J103
R70	Carbon film	1k ohm	1/4W	±5%		R25XEL03J102
R71	Carbon film	1.5k ohm	1/4W	±5%		R25XEL03J152
R72	Carbon film	1.5k ohm	1/4W	±5%		R25XEL03J152
R73	Carbon film	47k ohm	1/4W	±5%		R25XEL03J473
R74	Carbon film	22k ohm	1/4W	±5%		R25XEL03J223
R75	Carbon film	10k ohm	1/4W	±5%		R25XEL03J103
R76	Carbon film	100k ohm	1/4W	±5%		R25XEL03J104
R77	Carbon film	100k ohm	1/4W	±5%		R25XEL03J104
R78	Carbon film	47k ohm	1/4W	±5%		R25XEL03J473
R79	Carbon film	100k ohm	1/4W	±5%		R25XEL03J104
R80	Carbon film	3.3k ohm	1/4W	±5%		R25XEL03J332
R81	Carbon film	220k ohm	1/4W	±5%		R25XEL03J224
R82	Carbon film	5.6k ohm	1/4W	±5%		R25XEL03J562
R83	Carbon film	470 ohm	1/4W	±5%		R25XEL03J471
R84	Carbon film	1k ohm	1/4W	±5%		R25XEL03J102
R85	Carbon film	100 ohm	1/4W	±5%		R25XEL03J101
R86	Not used					

Ref. No.	Description				RS Part Number	MFR s Part Number
R87	Carbon film	330k ohm	1/4W	±5%		R25XEL03J334
R88	Carbon film	5.6k ohm	1/4W	±5%		R25XEL03J562
R89	Carbon film	100 ohm	1/4W	±5%		R25XEL03J101
R90	Carbon film	10k ohm	1/4W	±5%		R25XEL03J103
R91	Carbon film	8.2k ohm	1/4W	±5%		R25XEL03J822
R92	Carbon film	10k ohm	1/4W	±5%		R25XEL03J103
R93	Carbon film	100k ohm	1/4W	±5%		R25XEL03J104
R94	Carbon film	10k ohm	1/4W	±5%		R25XEL03J103
R95	Carbon film	10k ohm	1/4W	±5%		R25XEL03J103
R96	Carbon film	22k ohm	1/4W	±5%		R25XEL03J223
R97	Carbon film	4.7k ohm	1/4W	±5%		R25XEL03J472
R98	Carbon film	10k ohm	1/4W	±5%		R25XEL03J103
R99	Carbon film	47k ohm	1/4W	±5%		R25XEL03J473
R100	Carbon film	47k ohm	1/4W	±5%		R25XEL03J473
R101	Carbon film	22k ohm	1/4W	±5%		R25XEL03J223
R102	Carbon film	100k ohm	1/4W	±5%		R25XEL03J104
R103	Carbon film	22k ohm	1/4W	±5%		R25XEL03J223
R104	Carbon film	22k ohm	1/4W	±5%		R25XEL03J223
R105	Carbon film	4.7k ohm	1/4W	±5%		R25XEL03J472
R106	Carbon film	6.8k ohm	1/4W	±5%		R25XEL03J682
R107	Carbon film	3.3k ohm	1/4W	±5%		R25XEL03J332
R108	Carbon film	2.2k ohm	1/4W	±5%		R25XEL03J222
R109	Carbon film	47k ohm	1/4W	±5%		R25XEL03J473
R110	Carbon film	10k ohm	1/4W	±5%		R25XEL03J103
R111	Not used					
R112	Carbon film	10 ohm	1/4W	±5%		R25XEL03J100
R113	Carbon film	10 ohm	1/4W	±5%		R25XEL03J100
R114	Carbon film	10k ohm	1/4W	±5%		R25XEL03J103
R115	Carbon film	4.7k ohm	1/4W	±5%		R25XEL03J472
R116	Carbon film	2.2k ohm	1/4W	±5%		R25XEL03J222
R117	Carbon film	560 ohm	1/4W	±5%		R25XEL03J561
R118	Carbon film	4.7k ohm	1/4W	±5%		R25XEL03J472
R119	Carbon film	4.7k ohm	1/4W	±5%		R25XEL03J472
R120	Carbon film	560 ohm	1/4W	±5%		R25XEL03J561
R121	Carbon film	22k ohm	1/4W	±5%		R25XEL03J223
R122	Carbon film	100 ohm	1/4W	±5%		R25XEL03J101
R123	Carbon film	10k ohm	1/4W	±5%		R25XEL03J103
R124	Carbon film	6.8k ohm	1/4W	±5%		R25XEL03J682
R125	Carbon film	220k ohm	1/4W	±5%		R25XEL03J224
R126	Carbon film	22k ohm	1/4W	±5%		R25XEL03J223
R127	Carbon film	150k ohm	1/4W	±5%		R25XEL03J154
R128	Carbon film	2.2k ohm	1/4W	±5%		R25XEL03J222
R129	Carbon film	10k ohm	1/4W	±5%		R25XEL03J103
R130	Carbon film	1M ohm	1/4W	±5%		R25XEL03J105
R131	Carbon film	47k ohm	1/4W	±5%		R25XEL03J473
R132	Carbon film	100k ohm	1/4W	±5%		R25XEL03J104
R133	Carbon film	1M ohm	1/4W	±5%		R25XEL03J105
R134	Carbon film	22k ohm	1/4W	±5%		R25XEL03J223
R135	Carbon film	10k ohm	1/4W	±5%		R25XEL03J103
R136	Carbon film	10k ohm	1/4W	±5%		R25XEL03J103
R137	Carbon film	100 ohm	1/4W	±5%		R25XEL03J101
R138	Carbon film	1 ohm	1/4W	±5%		R25XEL03J1R0
R139	Carbon film	22k ohm	1/4W	±5%		R25XEL03J223
R140	Carbon film	33k ohm	1/4W	±5%		R25XEL03J333
R141	Carbon film	220 ohm	1/4W	±5%		R25XEL03J221
R142	Carbon film	560 ohm	1/4W	±5%		R25XEL03J561
*R143	Carbon film	3.3 ohm	1/2W	±5%		R50XELRJ3R3

* R143 changed to Fusible Resister RNF1/2S3R3J for Canadian model.

Ref. No.	Description				RS Part Number	MFR's Part Number
R144	Carbon film	470 ohm	1/4W	±5%		R25XEL03J471
R145	Solid film	1.8M ohm	1/2W	±10%	N0521FFC	ERC-12GK185
R146	Carbon film	47k ohm	1/4W	±5%		R25XEL03J473
R147	Carbon film	39k ohm	1/4W	±5%		R25XEL03J393
R148	Carbon film	47k ohm	1/4W	±5%		R25XFC06J473
R149	Carbon film	47k ohm	1/4W	±5%		R25XFC06J473
R150	Carbon film	47k ohm	1/4W	±5%		R25XFC06J473
R151	Carbon film	47k ohm	1/4W	±5%		R25XEL03J473
R152	Carbon film	4.7k ohm	1/4W	±5%		R25XEL03J472
R153	Carbon film	10k ohm	1/4W	±5%		R25XEL03J103
R154	Carbon film	10k ohm	1/4W	±5%		R25XEL03J103
R155	Carbon film	33k ohm	1/4W	±5%		R25XEL03J333
R156	Carbon film	10k ohm	1/4W	±5%		R25XEL03J103
R157	Carbon film	1.5M ohm	1/4W	±5%		R25XEL03J155
R158	Carbon film	470k ohm	1/4W	±5%		R25XEL03J474
R159	Carbon film	10k ohm	1/4W	±5%		R25XEL03J103
R160	Carbon film	10k ohm	1/4W	±5%		R25XEL03J103
R161	Carbon film	10k ohm	1/4W	±5%		R25XEL03J103
R162	Carbon film	330k ohm	1/4W	±5%		R25XEL03J334
R163	Carbon film	18k ohm	1/4W	±5%		R25XEL03J183
R164	Carbon film	47k ohm	1/4W	±5%		R25XEL03J473
R165	Carbon film	100k ohm	1/4W	±5%		R25XEL03J104
R166	Carbon film	2.2k ohm	1/4W	±5%		R25XFC06J222
R167	Carbon film	2.2k ohm	1/4W	±5%		R25XFC06J222
R168	Carbon film	2.2k ohm	1/4W	±5%		R25XFC06J222
R169	Carbon film	1k ohm	1/4W	±5%		R25XFC06J102
R170	Carbon film	1k ohm	1/4W	±5%		R25XFC06J102
R171	Carbon film	1k ohm	1/4W	±5%		R25XFC06J102
R172	Carbon film	1k ohm	1/4W	±5%		R25XFC06J102
R173	Carbon film	1k ohm	1/4W	±5%		R25XFC06J102
R174	Carbon film	1k ohm	1/4W	±5%		R25XFC06J102
R175	Carbon film	1k ohm	1/4W	±5%		R25XFC06J102
R176	Carbon film	1k ohm	1/4W	±5%		R25XFC06J102
R177	Carbon film	4.7k ohm	1/4W	±5%		R25XEL03J472
R178	Carbon film	560k ohm	1/4W	±5%		R25XEL03J564
R179	Carbon film	10 ohm	1/4W	±5%		R25XEL03J100
R180	Carbon film	6.8k ohm	1/4W	±5%		R25XEL03J682
R181	Carbon film	150 ohm	1/4W	±5%		R25XEL03J151
R182	Carbon film	100k ohm	1/4W	±5%		R25XEL03J104
R183	Carbon film	2.2k ohm	1/4W	±5%		R25XEL03J222
R184	Carbon film	56 ohm	1/4W	±5%		R25XEL03J560
R185	Carbon film	22 ohm	1/4W	±5%		R25XEL03J220
R186	Carbon film	220k ohm	1/4W	±5%		R25XEL03J224
R187	Carbon film	47k ohm	1/4W	±5%		R25XEL03J473
R188	Carbon film	47k ohm	1/4W	±5%		R25XEL03J473

CAPACITORS, TRIMMER			
Ref. No.	Description	RS Part Number	MFR's Part Number
TC1	Trimmer 10pF	C-1743	ECV-1ZW10x53T
TC2	Trimmer 20pF	C-1743	ECV-1ZW20x53T
TC3	Trimmer 10pF	C-1743	ECV-1ZW10x53T
TC4	Trimmer 10pF	C-1743	ECV-1ZW10x53T
TC5	Trimmer 10pF	C-1743	ECV-1ZW10x53T
TC6	Trimmer 20pF	C-1551	ECV-1ZW20x53T

VARIABLE RESISTORS			
Ref. No.	Description	RS Part Number	MFR's Part Number
VR1	Squelch 10k ohm (C)	P-7885	K1611008TE-10KC-20
VR2	Volume w/Switch 10k ohm (A)	P-7884	RK1611111-10KA-20

MISCELLANEOUS			
Ref. No.	Description	RS Part Number	MFR's Part Number
LCD1	LCD	L-1975	LCBAA3021A
⚠	Electro Luminescence	L-1976	GE-85D-6067
⚠	Cord AC	W-3388	UP-953-J01
	Strain, Relief, Line Cord	HB-0705	SR-3P-4
	Cable Assembly, DC (Non Repairable)	W-3388	GA-85D-5983
	Terminal, Wire	HB-9616	1-SD
	Accessory Bag for Holder AC Cord	HB-1515	GE-18D-4215
	Accessory Bag for Bracket Mounting	HW2000143M	GE-17D-3738
	Wire Kit		#532(A)
	Hardware Kit	HW2000113	#532(B)
P6,7	Connector, Pin (2 Pin Male)		PI-011-02M
P2,3	Connector, Pin (3 Pin Male)		PI-011-03M
P10	Connector, Pin (12 Pin Male)		PI-011-12M
SW1	Switch, Push (Reset)		SKHHLA
J4	Jack, Tape Out		JPJ0573-01-010
J5	Jack, Ext. SPKR		S-G8036
J8	Jack, Ext. PWR		HEC0470-01-630
	Jumper, Short		ERD-25TC0B
TP1~TP5	Jumper, Short		ERD-25TC0
	Antenna, Telescopic	A-0530	T-1170
	Plate, CPU Shield (Bottom)		GE-85D-6073
	Plate,RF Shield		GE-85D-6075
	Plate, PLL Shield (Bottom)		GE-85D-6074

DISASSEMBLY/EXPLODED VIEW

① Remove two screws Ⓐ and detach the Bracket (23) .
② Remove four screws Ⓑ .
③ Remove two screws Ⓒ and two washers Ⓓ .
④ Detach the top and bottom cabinet. Use care not to damage speaker leads connected to the top cabinet.

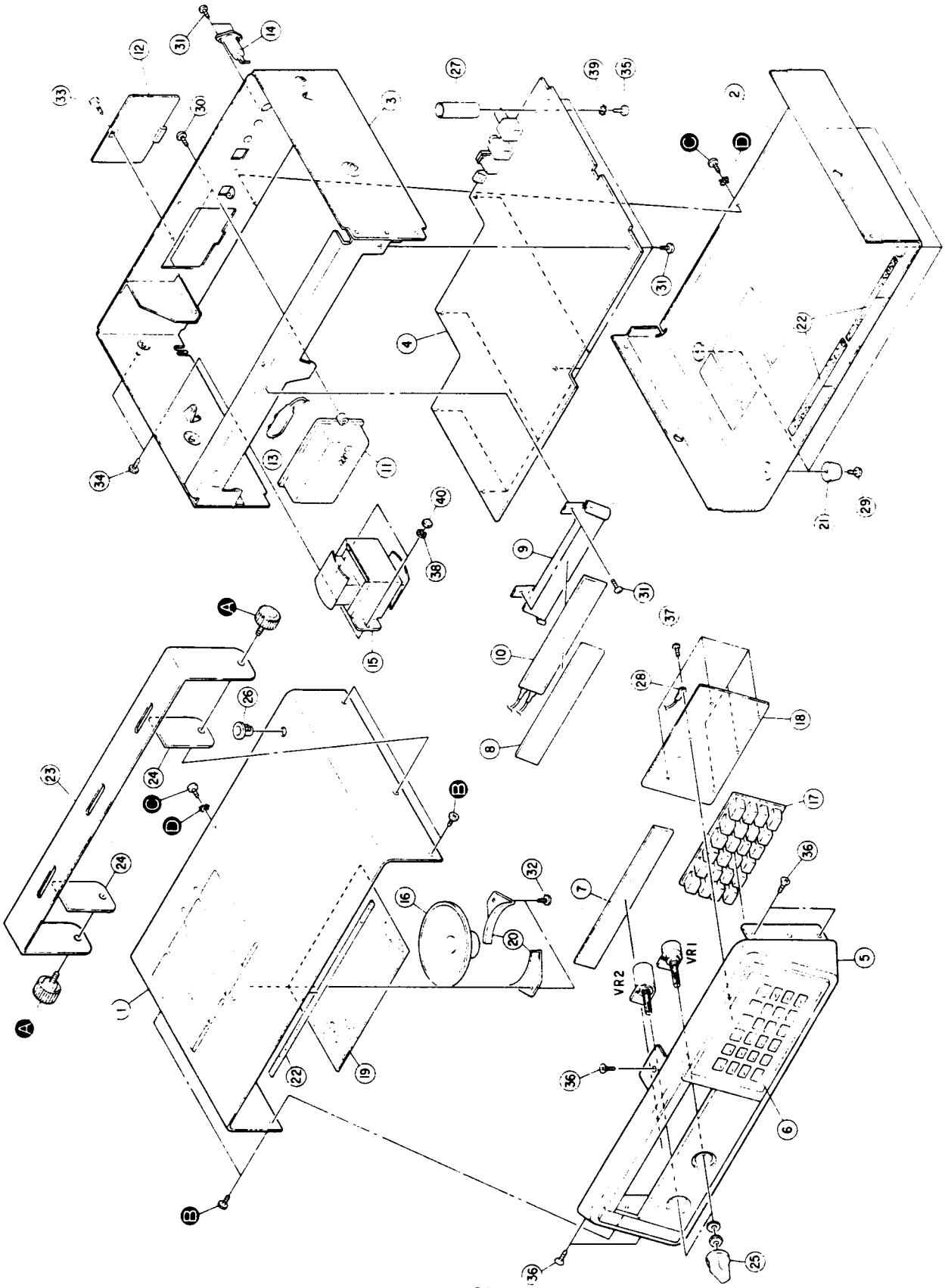

MECHANICAL PARTS LIST

Ref. No.	Description	RS Part Number	MFR's Part Number
1	Cabinet (TOP)	Z-0807	GE-85B-5886
2	Cabinet (BOTTOM)	Z-0808	GE-85B-5887
3	Chassis		GE-85A-5885
4	PCB Assembly, Main	XB-1188	GA-85B-6154
	Escutcheon, Front Assembly (Non Repairable)	Z-0806	GA-85D-5897
5	Front Escutcheon		GE 85D 5890
6	Holder, Keyboard		GE-85D-5558
7	Window, LCD		GE-85D-5891
8 LCD1	LCD	L-1975	LCBAA3021A
9	Holder, LCD		GE-85D-6076
10	Electro Luminescence	L-1976	GE-85D-6067
11	Box, Battery	B-0217	GE-21D-5728
12	Cover, Battery Compartment	DB-0094	GE-79D-0113
13	Snap, Battery (200 m/m)	B-0209	I Type
14 J1	Jack, Antenna	J-1783	JA-C-030
15 T14	Transformer, Power	TA-0074	Z1739
16 SPK1	Speaker, 2W 8 ohm	SP-5332	C080A20-G0310
17	Rubber, Keyboard	HC-2793	GE-84D-5894
18	PCB Assembly, Keyboard	XB-1189	GA-85C-6156
19	Spacer, Speaker		GE-85D-6079
20	Holder, Speaker	HC-3797	GE-85D-4580
21	Foot	F-0053	OK-16
22	Spacer, Bonnet		GE-21D-5911
23	Bracket, Mounting	MB-1003	GE-21C-5725
24	Spacer, Mounting Bracket	HC-3063	GE-19D-4815
25	Knob, Volume/Squelch	K-1002	GE-81D-1847
26	Bushing, Antenna	HC-3062	SB-437-5
27	Guide, Antenna		GE-79D-0118
28	Plate, Lug L=10m/m		L=10m/m
29	Screw, 3x10 Trusshead Tapping		TT 3x10
30	Screw, 3x8 Trusshead Tapping		TT 3x8
31	Screw, 3x6 Trusshead Tapping	HD-1777	TT 3x6
32	Screw 3x6 Bindinghead Machine Blk		BM 3x6
33	Screw, 3x8 Bindinghead Machine		GE-79D-0541
34	Screw, 4x8 Panhead Machine	HD-1778	PM 4x8
35	Screw, 3x12 Panhead Machine		PM 3x12
36	Screw, 3x6 Countersunkhead Machine	HD-1781	PM 3x6
37	Screw, 2x6 Panhead Tapping	"P" Type 2x6	
38	Washer, Outernal Toothed Lock, 4m/m	HD-8575	OTW 4m/m
39	Washer, Internal Toothed Lock, 3m/m		ITW 3m/m
40	Nut, 4m/m		N 4m/m
Ⓐ	Screw, Mounting Bracket	HD-1673	GE-23D-7587
Ⓑ	Screw, 3x10 Bindinghead Machine Blk		BM 3x10
Ⓒ	Screw, 3x6 Bindinghead Machine Blk		BM 3x6
Ⓓ	Washer, Outer Toothed Lock, 3m/m		OTW 3m/m

SEMICONDUCTOR LEAD IDENTIFICATION AND IC CIRCUIT DIAGRAM

INTEGRATED CIRCUIT LEAD IDENTIFICATION

IC1 MB504

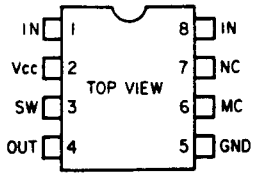

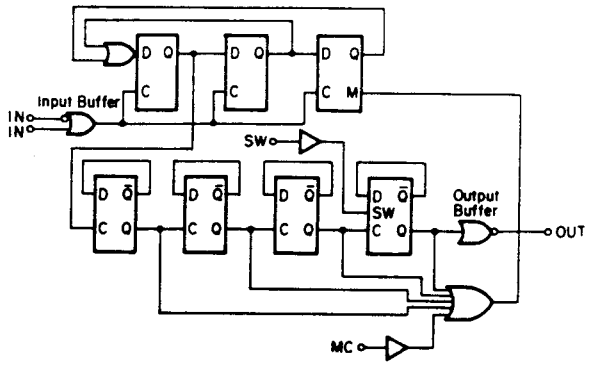

IC2 TK10402

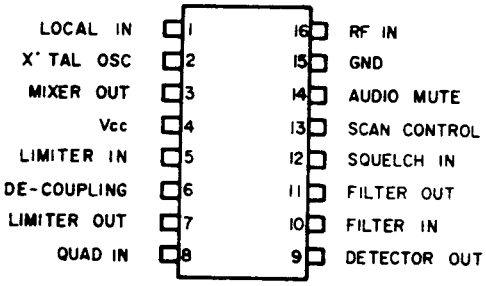

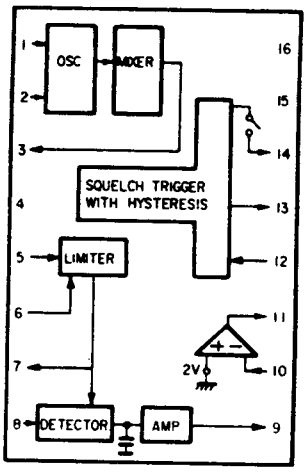

IC3 TC4066BP

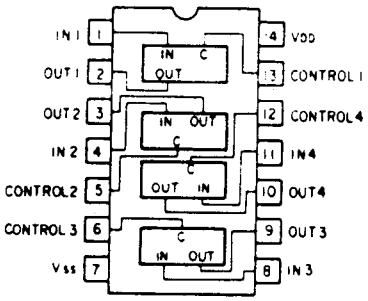

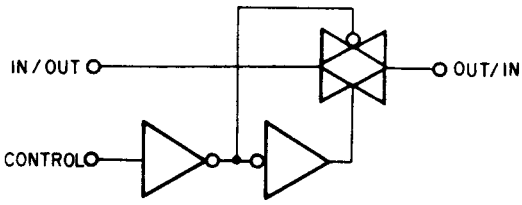

IC4 TA78006AP

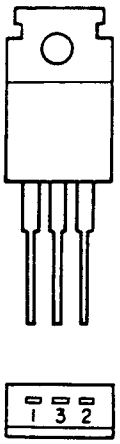

1. INPUT
2. OUTPUT
3. GND

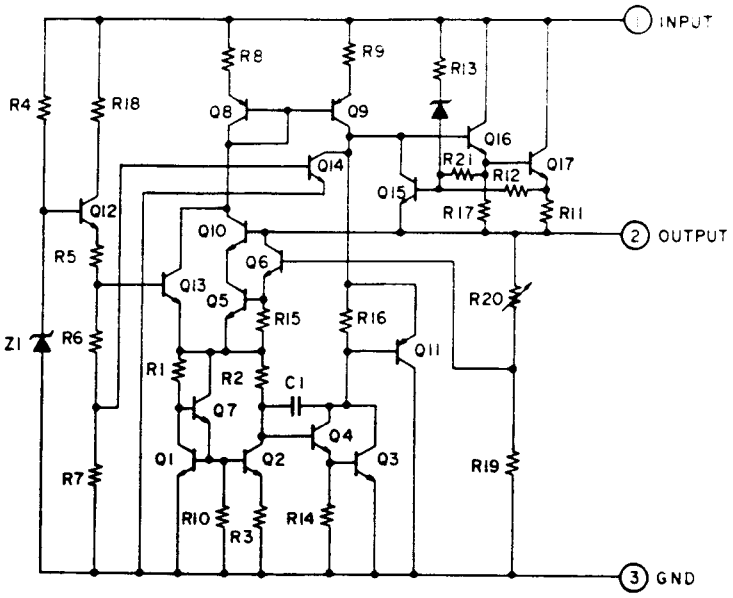

IC5 μPD4069UBP

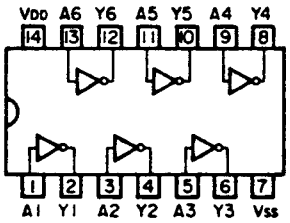

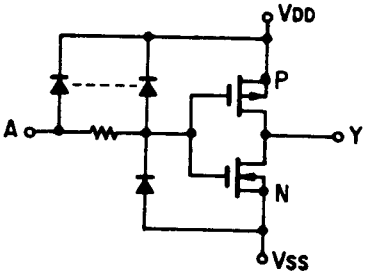

IC6 μPC324C

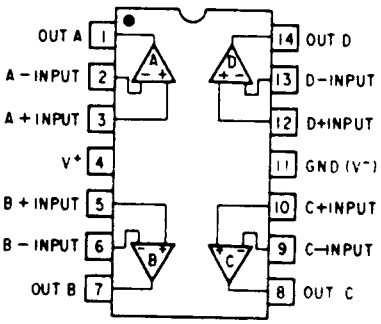

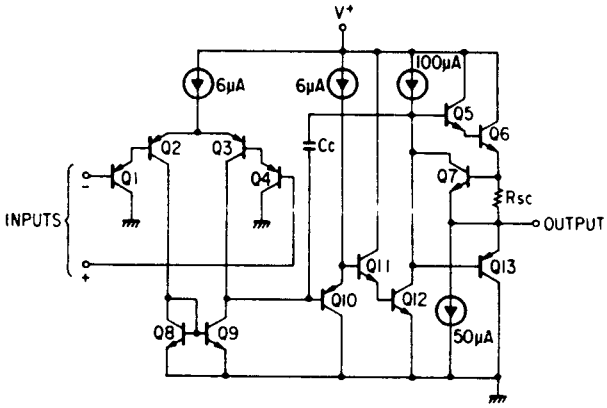

IC7 MC145158

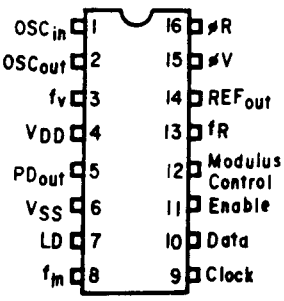

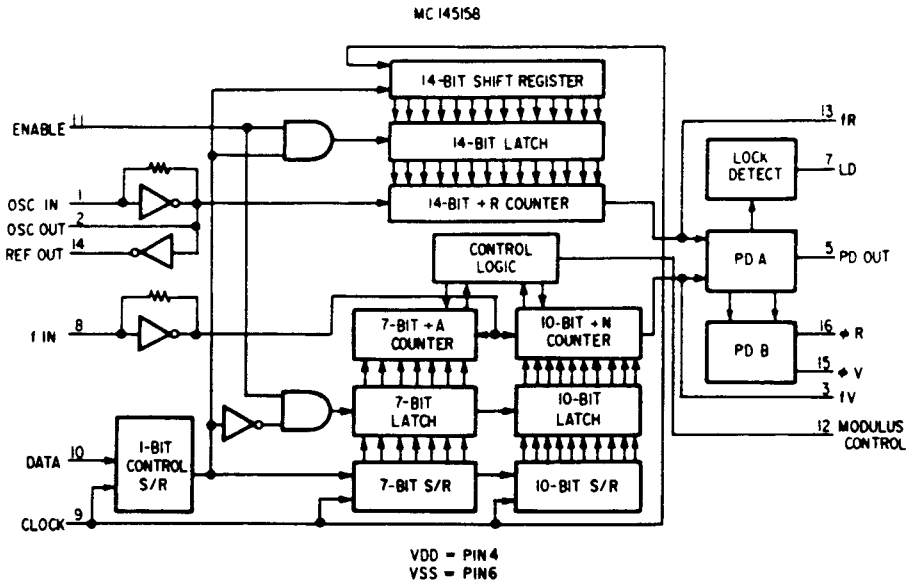

IC8 μPD4094B

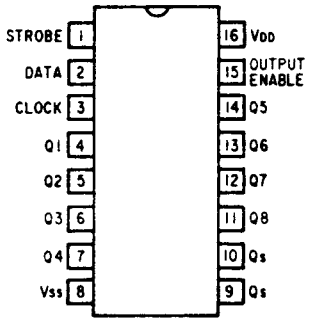

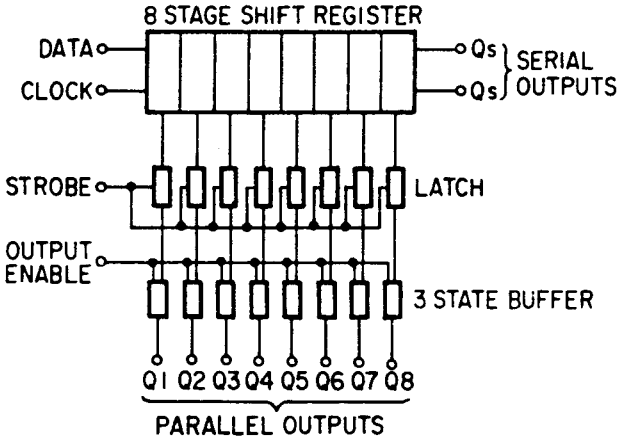

IC9 TDA190:

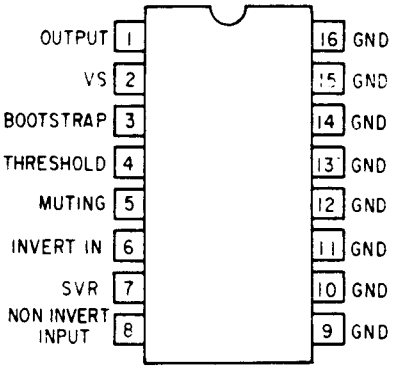

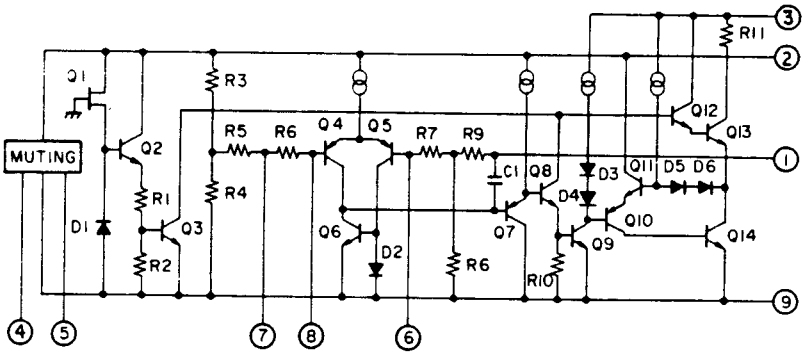

IC10 S-81250HG

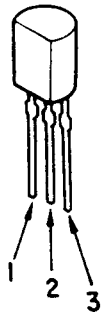

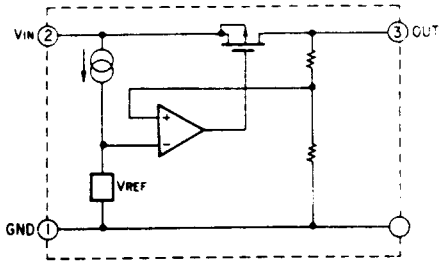

IC12 μPD446G

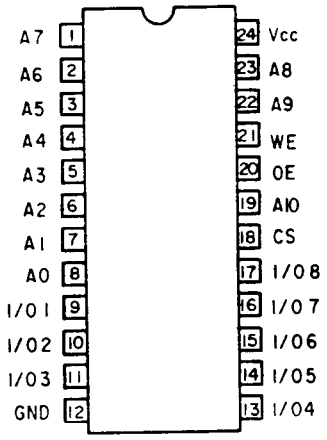

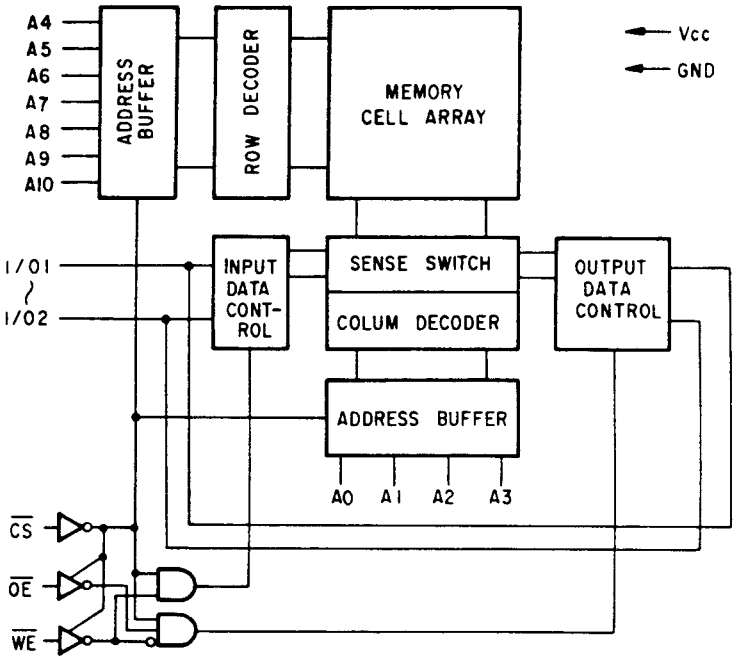

IC11 GRE-0437A

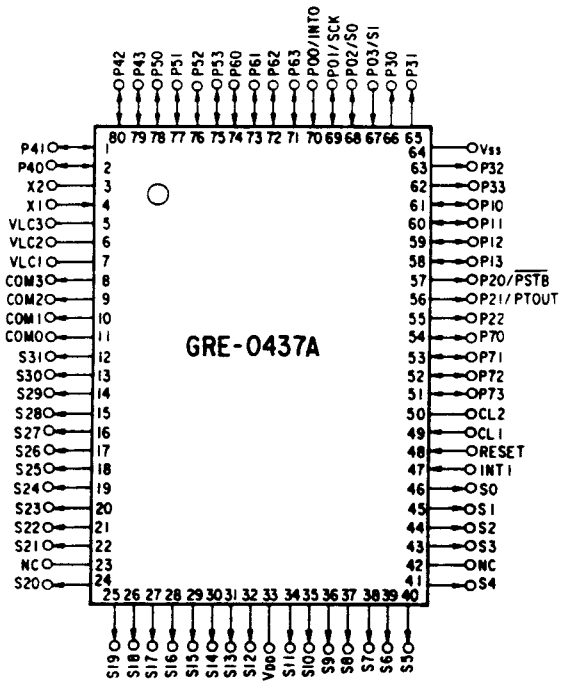

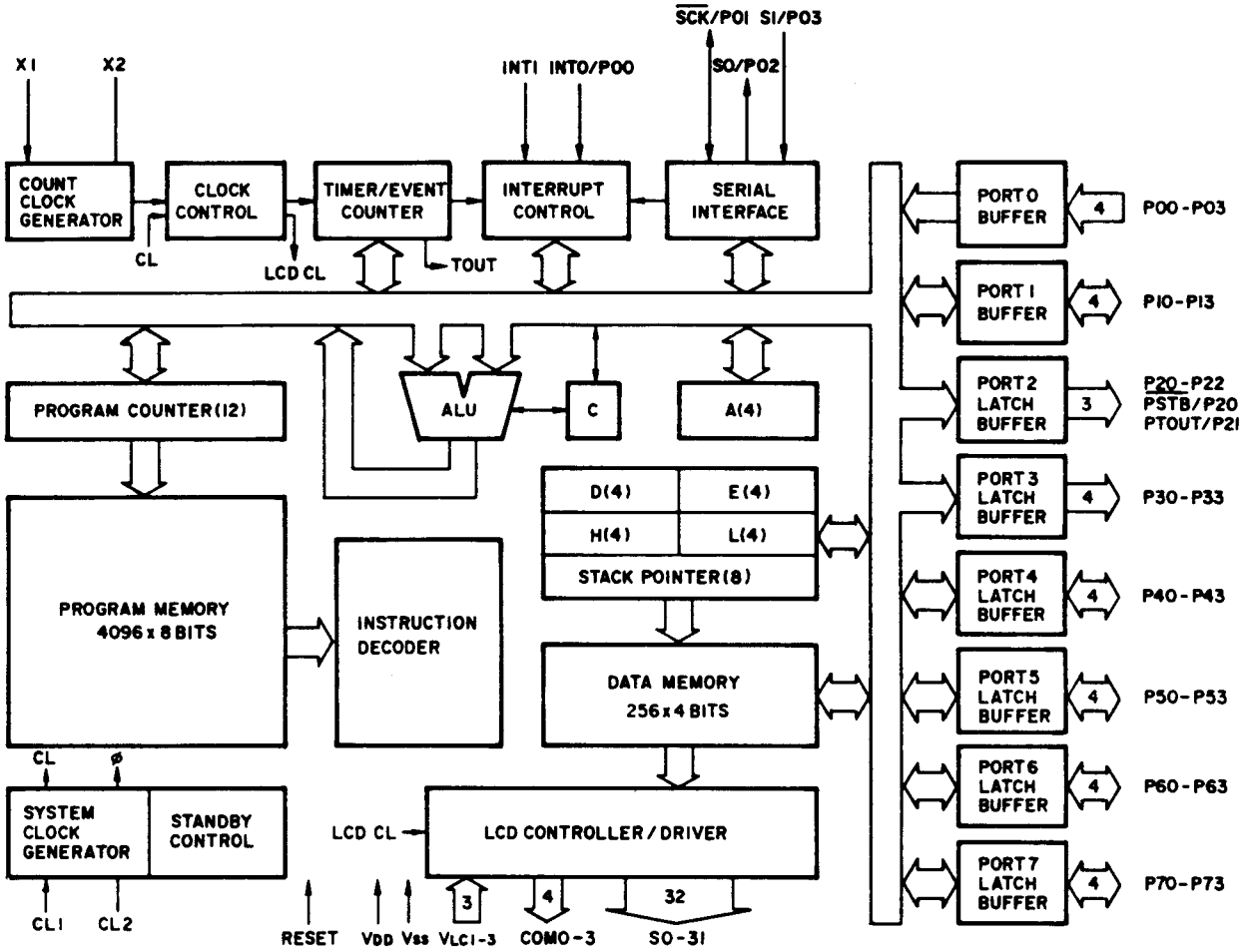

TRANSISTOR LEAD IDENTIFICATION

(A) 3SK96

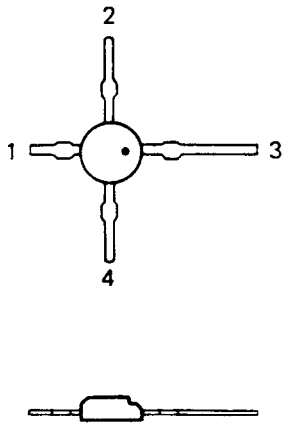

1. GATE 1
2. GATE 2
3. DRAIN
4. SOURCE

(B) 3SK101(Y)

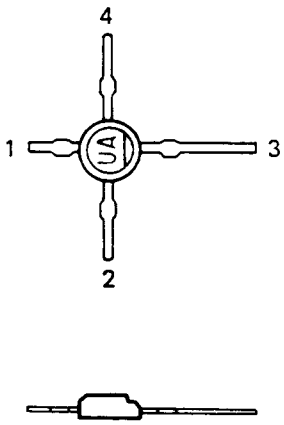

1. GATE 1
2. SOURCE
3. DRAIN
4. GATE 2

(C) 2SK118

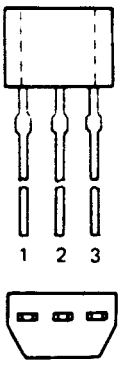

1. SOURCE
2. GATE
3. DRAIN

(D) 2SA1150(Y)
2SC2458(Y,GR)
2SC2668(O,Y)
RN2202

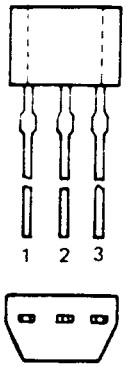

1. EMITTER
2. COLLECTOR
3. BASE

(E) 2SC2347

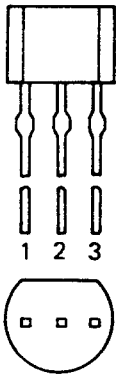

1. EMITTER
2. COLLECTOR
3. BASE

(F) 2SC2464,
2SC2466

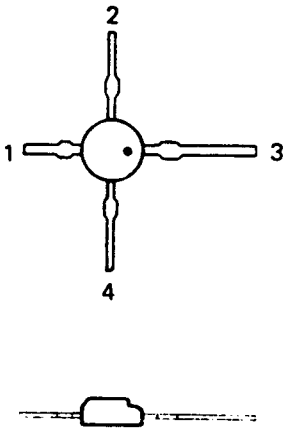

1. EMITTER
2. BASE
3. COLLECTOR
4. BASE

(G) 2SC2498

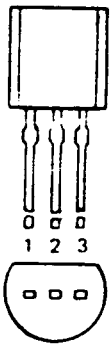

2. EMITTER
3. COLLECTOR

(H) UN4111

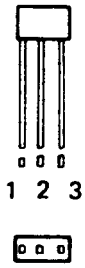

1. BASE
2. COLLECTOR
3. EMITTER

DIODE IDENTIFICATION AND LEAD POLARITY

A) 1SS85

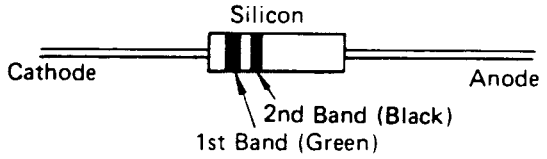

B) 1SV89

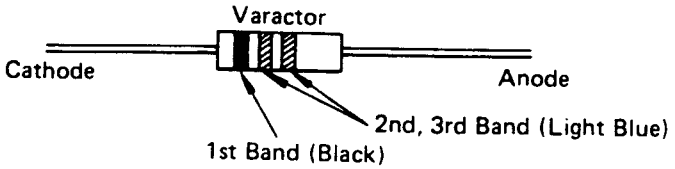

C) 1SV136A

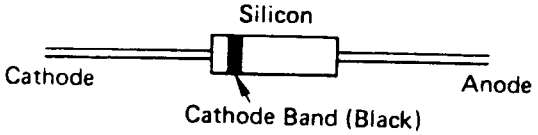

D) 1SV145B

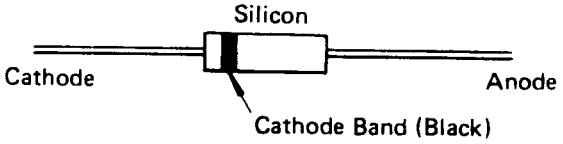

E) BB329

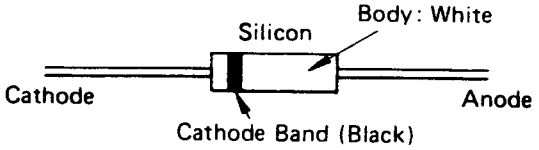

F) 1K261

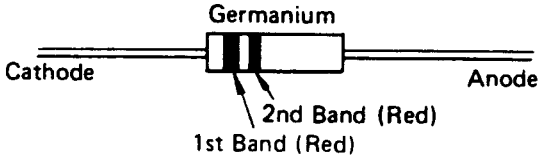

G) HZ2B2LL, HZ4BLL

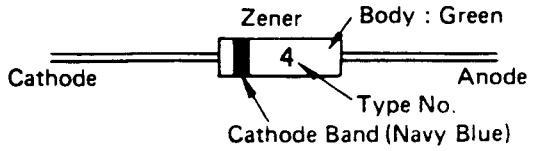

H) HZ7B2L, HZ12C2L
HZ163L

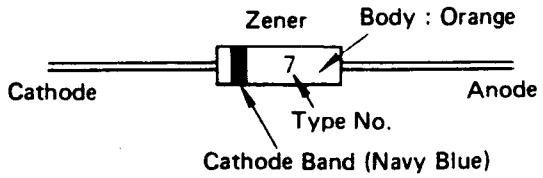

I) S5277B

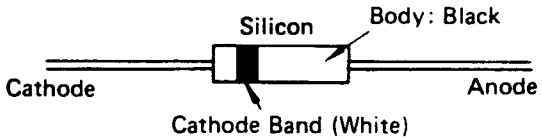

J) 1S2076A

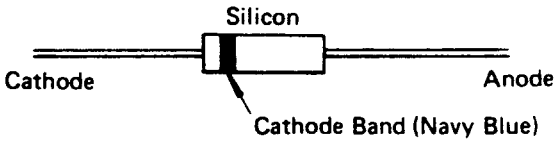

K) 1B4B41

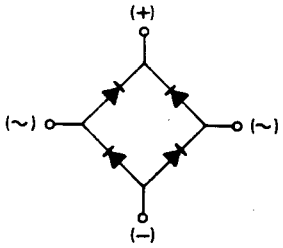

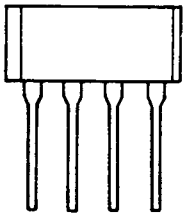

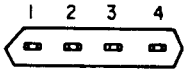

1. (+)
2. (~)
3. (~)
4. (−)

MICROPROCESSOR (IC11) PORT FORMAT

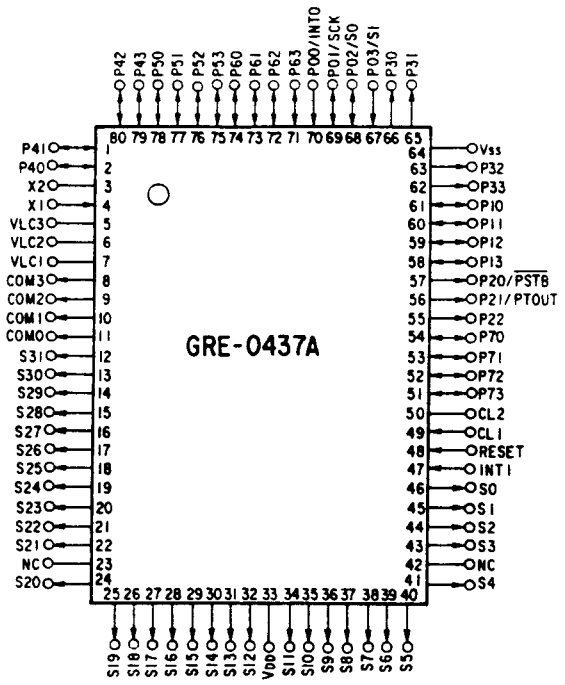

Pin No.	Description	Pin No.	Description	Pin No.	Description
1	Band select, keyboard	31	LCD	60	Memory Data I/O
2	Band select, keyboard	32	LCD	61	Memory Data I/O
3	Count clock oscillator	33	VDD	62	Band select, keyboard
4	Count clock oscillator	34	LCD	63	Band select, keyboard
5	LCD bias	35	LCD	64	VSS
6	LCD bias	36	LCD	65	Band select, keyboard
7	LCD bias	37	LCD	66	Band select, keyboard
8	LCD	38	LCD	67	Squelch Input
9	LCD	39	NC	68	Serial Date out
10	LCD	40	NC	69	Serial, clock
11	LCD	41	NC	70	Hold Input
12	LCD	42	NC	71	LCD control
13	LCD	43	NC	72	Key tone
14	LCD	44	NC	73	Mute out
15	LCD	45	NC	74	Memory Data I/O
16	LCD	46	NC	75	Memory output enable
17	LCD	47	GND	76	Keyboard
18	LCD	48	RESET	77	Keyboard
19	LCD	49	System clock oscillator	78	Keyboard
20	LCD	50	System clock oscillator	79	Keyboard
21	LCD	51	Key Lock, Low Batt, Band	80	Band select, keyboard
22	LCD		Select Input		
23	NC	52	Keyboard		
24	LCD	53	Keyboard		
25	LCD	54	Keyboard		
26	LCD	55	Shift register strobe		
27	LCD	56	PLL latch pulse out		
28	LCD	57	Memory write enable		
29	LCD	58	Memory Data I/O		
30	LCD	59	Memory Data I/O		

APPENDIX

VHF-MID Band Alignment for European/Australian models

CIRCUIT REVISION

1. The following parts should be changed.

Ref. No.	Low band	Mid band
L17	Not used	4LN-092
T3	GR-N5341	GR-N791
T6	GR-N5341	GR-N791
R189	Not used	47kΩ
C11	0.001μF	56pF
C19	0.001μF	56pF
C39	0.001μF	100pF
C41	56pF	22pF
C42	22pF	10pF

Ref. No.	Low band	Mid band
C169	Not used	18pF
C170	Not used	56pF
D15	BB329	Not used
D59	Not used	BB329
T14	Z1739	Z1882

2. D45 changed to IC11 Pin 66 from IC11 Pin 65.
3. R112 changed to IC8 Pin 5 from IC8 Pin 4.

VCO ALIGNMENT

Step 1: Connect a DC SSVM to TP5 and ground.
Step 2: Program CH1, 2 and 3 as follows:
CH1 (68 MHz), CH2 (78 MHz), CH3 (88 MHz)
Step 3: Select channel 3 (88 MHz) and adjust TC3 for 11.0V on the DC SSVM.
Step 4: Select channel 1 (68 MHz) and adjust T7 for 1.5V on the DC SSVM.
Step 5: Repeat steps 3 and 4 until no improvement is observed.
The DC SSVM should show as below.

68 MHz	Voltage of TP5	1.5V
78 MHz	Voltage of TP5	4.7V
88 MHz	Voltage of TP5	11.0V

RF AMP ALIGNMENT

Step 1: Connect instruments as shown below.

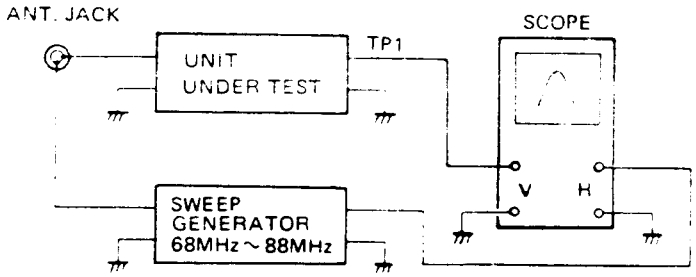

Step 2: Program 68 MHz (CH1), 78 MHz (CH2), 88 MHz (CH3).
Step 3: Select Channel 1 (68 MHz) and adjust T3 and T6 for maximum RF waveform.
Step 4: Check the Channels 1 ~ 3 one by one for maximum RF waveform.
Slight deviation as shown below is acceptable.

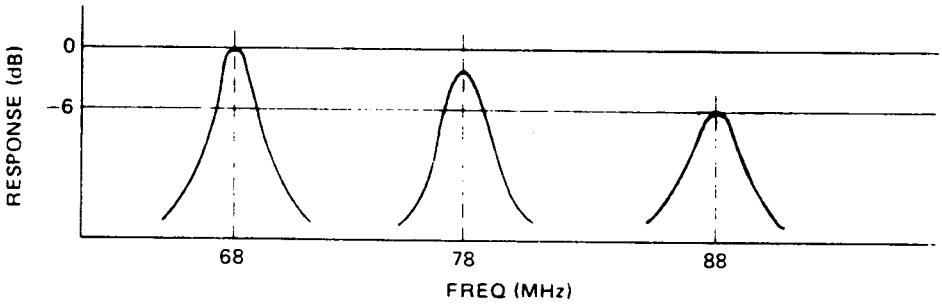

SCHEMATIC DIAGRAM

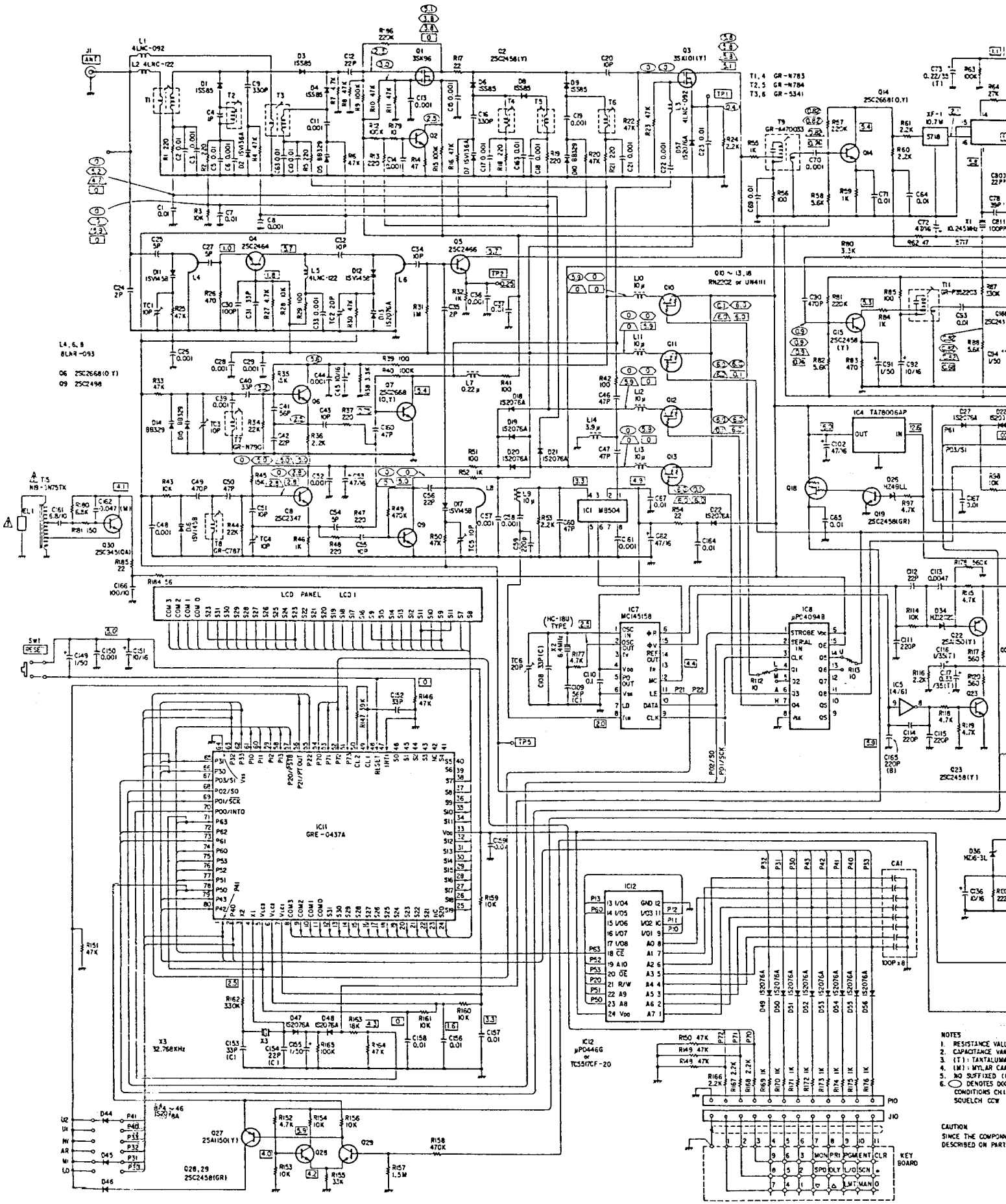

SCHEMATIC DIAGRAM

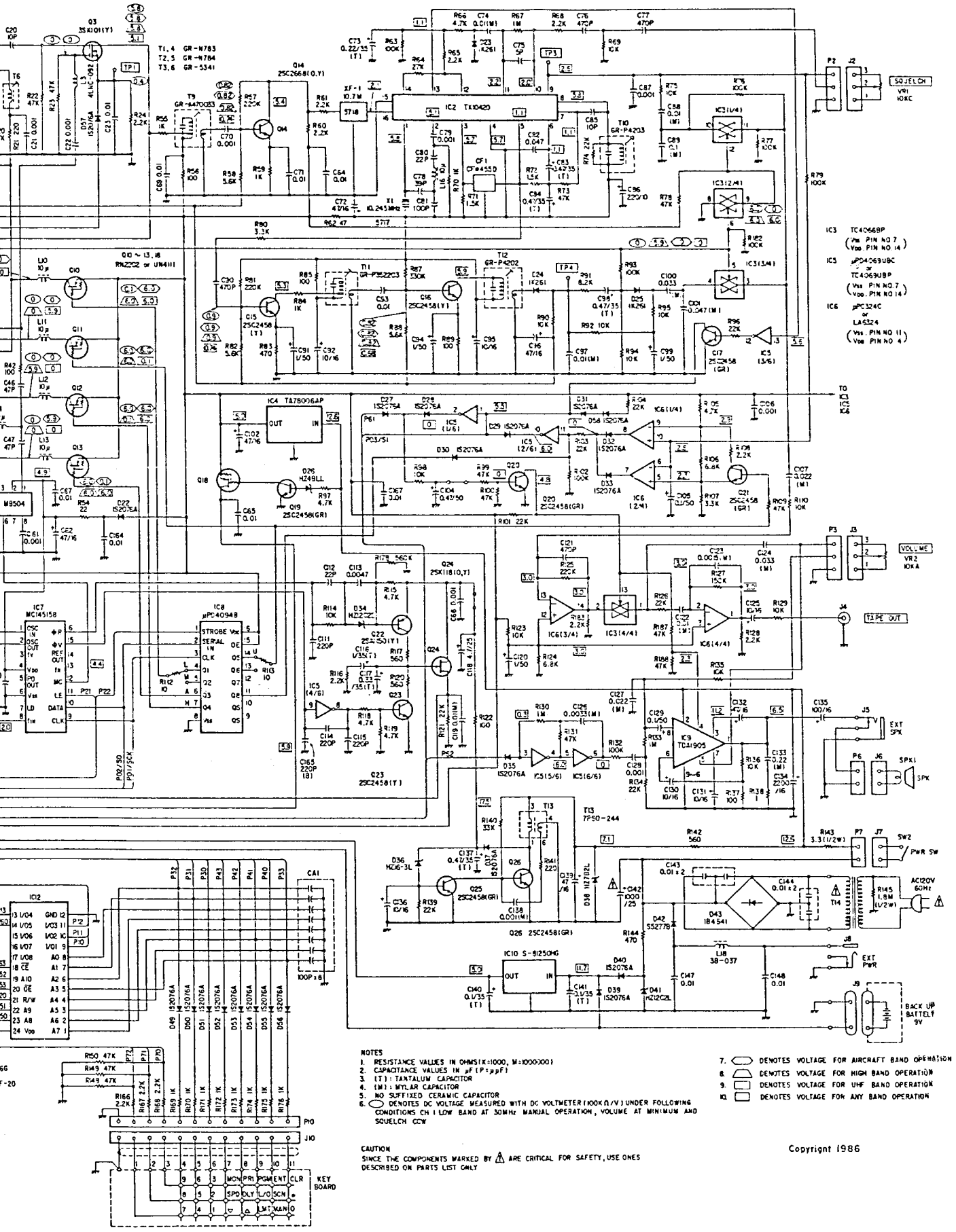

NOTES

1. RESISTANCE VALUES IN OHMS(K=1000, M=1000000)
2. CAPACITANCE VALUES IN μF(P=μμF)
3. (T) : TANTALUM CAPACITOR
4. (M) : MYLAR CAPACITOR
5. NO SUFFIXED CERAMIC CAPACITOR
6. ⬭ DENOTES DC VOLTAGE MEASURED WITH DC VOLTMETER(100KΩ/V) UNDER FOLLOWING CONDITIONS CH 1 LOW BAND AT 30MHz MANUAL OPERATION, VOLUME AT MINIMUM AND SQUELCH CCW
7. ⬭ DENOTES VOLTAGE FOR AIRCRAFT BAND OPERATION
8. ⬭ DENOTES VOLTAGE FOR HIGH BAND OPERATION
9. ⬭ DENOTES VOLTAGE FOR UHF BAND OPERATION
10. ⬭ DENOTES VOLTAGE FOR ANY BAND OPERATION

CAUTION

SINCE THE COMPONENTS MARKED BY ⚠ ARE CRITICAL FOR SAFETY, USE ONES DESCRIBED ON PARTS LIST ONLY

U.S. PATENT NOS.
3,794,925
3,801,914
3,961,261
3,962,644
4,027,251
4,092,594
4,123,715
4,245,348

MS-2000113

CUSTOM MANUFACTURED FOR RADIO SHACK
A Division of Tandy Corporation

U.S.A.: FORT WORTH, TEXAS 76102
CANADA: BARRIE, ONTARIO L4M 4W5

TANDY CORPORATION

AUSTRALIA	BELGIUM	FRANCE	U. K.
91 Kurrajong Avenue Mount Druitt. N.S.W. 2770	Rue des Pieds d'Alouette. 39 5140 Naninne (Namur)	Centre Commercial des 3 Fontaines B.P. 147 95022 Cergy Pontoise Cedex	Bilston Road Wednesbury West Midlands WS10 7JN

5A6

Printed in Japan