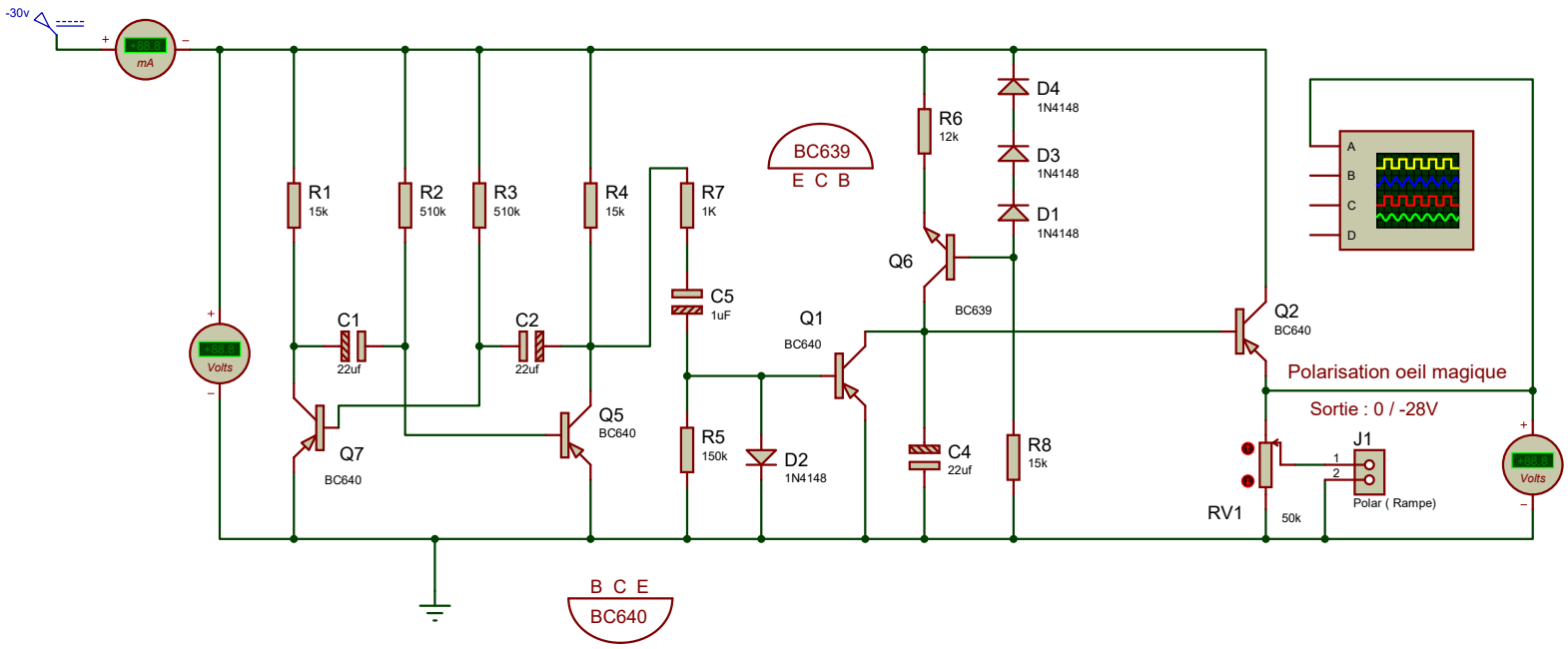

FILE NAME:	GENE_RAMPE_negatif2.pdsprj
DESIGN TITLE:	GENE_RAMPE_negatif2.pdsprj
PATH:	F:\bureau\Fabrication Lampemetre\proteus\GENE_RAMPE_negati
BY: @AUTHOR	REV:@REV
DATE:	29/12/2021
PAGE:	1 of 1
TIME:	20:31:28